For the competent person

Installation instructions

aroTHERM

VWL ../2 A 230 V

GB

Publisher/manufacturer
Vaillant GmbH
Berghauser Str. 40 ▮ D-42859 Remscheid
Tel. +49 21 91 18-0 ▮ Fax +49 21 91 18-28 10
info@vaillant.de ▮ www.vaillant.de

Vaillant

Contents

1 Safety ... 3
1.1 Action-related warnings ... 3
1.2 Required personnel qualifications ... 3
1.3 General safety information ... 3
1.4 Regulations (directives, laws, standards) ... 4
1.5 CE label ... 4
1.6 Approvals ... 4
1.7 Local regulations ... 4
1.8 Regulations ... 5
1.9 Other regulations ... 5
1.10 Intended use ... 5
2 Notes on the documentation ... 6
2.1 Observing other applicable documents ... 6
2.2 Storing documents ... 6
2.3 Applicability of the instructions ... 6
3 System overview ... 6
3.1 Safety devices ... 6
3.2 Design of the heat pump system ... 6
3.3 Functionality ... 6
3.4 System diagram (VWL 55/2 A 230 V) ... 7
3.5 System diagram (VWL 85/2 A 230 V, VWL 115/2 A 230 V, VWL 155/2 A 230 V) ... 8
4 Overview of the equipment ... 8
4.1 Type designation and serial number ... 8
4.2 Information on the identification plate ... 8
5 Assembly and installation ... 9
5.1 Preparing for fitting and installation ... 9
5.2 Carrying out the installation ... 13
5.3 Hydraulics installation ... 14
5.4 Carrying out the electrical installation ... 16
5.5 Connection diagrams ... 18
6 Start-up ... 20
6.1 Run the start-up ... 20
6.2 Heat pump operating concept ... 20
6.3 Running through the installation assistant ... 20
6.4 Calling up Live Monitor (checking status codes) ... 20
6.5 Calling up statistics ... 20
6.6 Filling the heating circuit ... 20
6.7 Checking and treating the heating water/filling and supplementary water ... 21
6.8 Filling the heating installation ... 22
6.9 Activating the heat pump ... 22
6.10 Checking the product's operation ... 22
6.11 Operating noises ... 23
6.12 Adjusting the heating circuit ... 23
6.13 Installing the side cladding ... 24
6.14 Instructing the operator ... 24
7 Maintenance ... 25
7.1 Observing maintenance intervals ... 25
7.2 Preparing for maintenance ... 25
7.3 Instructions before carrying out maintenance work ... 25
7.4 Yearly maintenance ... 25
7.5 Cleaning the product ... 25
7.6 Draining the product ... 26
7.7 Checking the product's status codes ... 26
7.8 Checking the electrical installation ... 26
7.9 Start-up following maintenance ... 26
8 Troubleshooting ... 26
8.1 Troubleshooting ... 26
8.2 Fault codes ... 26
8.3 Carrying out the actuator test ... 27
8.4 Carrying out check programmes ... 27
9 Decommissioning ... 27
9.1 Temporary decommissioning ... 27
9.2 Permanently decommissioning ... 27
10 Vaillant customer service ... 27
10.1 Customer service ... 27
11 Disposal ... 27
11.1 Recycling and disposal ... 27
11.2 Arranging disposal of coolant ... 28
Appendix ... 29
A Heat pump schematic ... 29
A.1 Heat pump schematic drawing (VWL 55/2 A 230 V) ... 29
A.2 Heat pump schematic drawing (VWL 85/2 A 230 V) ... 30
A.3 Heat pump schematic drawing (VWL 115/2 A 230 V) ... 31
A.4 Heat pump schematic drawing (VWL 155/2 A 230 V) ... 32
B Heat pump setting parameters ... 32
C Status codes ... 33
D Technical data ... 35
E Overview of fault codes ... 37
F Commissioning Checklist ... 40
Index ... 42

1 Safety

1.1 Action-related warnings

Classification of action-related warnings

The action-related warnings are classified in accordance with the severity of the possible danger using the following warning signs and signal words:

Warning symbols and signal words

Danger!
Imminent danger to life or risk of severe personal injury

Danger!
Risk of death from electric shock

Warning.
Risk of minor personal injury

Caution.
Risk of material or environmental damage

1.2 Required personnel qualifications

Improper work carried out on the product may cause material damage to the complete installation and, as a consequence, may even cause personal injury.

- You should therefore only work on the product if you are an authorised competent person.

1.3 General safety information

1.3.1 Danger caused by improper operation

Improper operation may present a danger to you and others, and cause material damage.

- Carefully read the enclosed instructions and all other applicable documents, particularly the "Safety" section and the warnings.

1.3.2 Risk of death from electric shock

There is a risk of death from electric shock if you touch live components.

Before commencing work on the product:

- Disconnect the product from the power supply by switching off all power supplies (electrical partition with a contact opening of at least 3 mm, e.g. fuse or line protection switch).
- Secure against being switched back on again.
- Wait for at least 3 minutes until the capacitors have discharged.
- Check that there is no voltage.

1.3.3 Risk of death due to lack of safety devices

A lack of safety devices (e.g. expansion relief valve, expansion vessel) may lead to potentially fatal scalding and other injuries, e.g. due to explosions. The schematic drawings included in this document do not show all safety devices required for correct installation.

- Install the necessary safety devices in the system.
- Inform the operator about the function and position of the safety devices.
- Observe the applicable national and international laws, standards and guidelines.

1.3.4 Risk of being scalded by hot drinking water

There is a risk of scalding at the hot water draw-off points if the hot water temperatures are greater than 50 °C. Young children and elderly persons are particularly at risk, even at lower temperatures.

- Select the temperature so that nobody is at risk.

1.3.5 Risk of injury or material damage due to incorrect handling of the product

Using the fins on the front side of the product as conductors may lead to injuries (due to falling) or to material damage.

- Do not use the fins as conductors.

1.3.6 Risk of material damage due to additional elements in the heating water

Unsuitable frost and corrosion protection agents may damage seals and other components of the heating circuit and may therefore also lead to leaks in the water outlet.

- Only add approved frost and corrosion protection agents to the heating water.

1.3.7 Risk of material damage caused by using an unsuitable tool

- Use the correct tool to tighten or loosen screw connections.

1.3.8 Avoid environmental damage caused by escaping coolant

The heat pump contains R410A coolant. The coolant must not be allowed to escape into the atmosphere. R410A is a fluorinated greenhouse gas covered by the Kyoto Protocol, with a GWP of 1725 (GWP = Global Warming Potential). If it escapes into the atmosphere, its impact is 1725 times stronger than the natural greenhouse gas CO_2.

Before the heat pump is disposed of, the coolant it contains must be completely drained into a suitable vessel so that it can then be recycled or disposed of in accordance with the regulations.

- Ensure that only officially certified competent persons with appropriate protective equipment carry out maintenance work on the coolant circuit or access it.
- Arrange for the coolant contained in the product to be recycled or disposed of by accredited specialists in accordance with regulations.
- Only use coolant R410A.
- Only use a suitable R410A tool for the filling, pressure measurement, vacuum generation and discharge.
- Solder the lines using shielding gas. Check the lines for leak-tightness using nitrogen.
- In the event of a repair or maintenance work, fill the coolant circuit with liquid coolant.
- If the coolant circuit is not leak-tight, check which component must be repaired or replaced.
- Lower the negative pressure in the coolant circuit to max. 10 mbar (1000 Pa).
- When filling the coolant circuit, observe the values in the "Technical data" section.

1.4 Regulations (directives, laws, standards)

- Observe the national regulations, standards, guidelines and laws.

1.5 CE label

The CE label shows that the products comply with the basic requirements of the applicable directives as stated on the identification plate.

The declaration of conformity can be viewed at the manufacturer's site.

1.6 Approvals

This product has been fully tested in accordance with:

– BS EN 14511:2011

1.7 Local regulations

Benchmark places responsibilities on both manufacturers and installers. The purpose is to ensure that customers are provided with the correct equipment for their needs, that it is installed, commissioned and serviced in accordance with the manufacturer’s instructions by a competent person approved at the time by the Health and Safety Executive and that it meets the requirements of the appropriate Building Regulations. The Benchmark Checklist can be used to demonstrate compliance with Building Regulations and should be provided to the customer for future reference.

Installers are required to carry out installation, commissioning and servicing work in accordance with the Benchmark Code of Practice which is available from the Heating and Hot-water Industry Council who manage and promote the Scheme.

benchmark
COLLECTIVE MARK
THE MARK OF QUALITY FOR THE INSTALLATION, COMMISSIONING AND SERVICING OF DOMESTIC HEATING AND HOT WATER SYSTEMS

Visit www.centralheating.co.uk for more information.

Planning consent and Building works notification should be submitted either to Building Control or to a Competent Person Provider.

1.8 Regulations

1.8.1 Statutory requirements

Where no British Standards exists, materials and equipment should be fi t for their purpose and of suitable quality and workmanship.

The installation of this appliance must be carried out by a competent person in accordance the rules in force in the countries of destination.

Manufacturer's instructions must not be taken as overriding statutory requirements.

1.8.2 Standards

On installing and commissioning the appliance you must adhere to the technical rules, standards and provisions in eff ect at the time.

1.8.3 Reminder of existing regulatory acts

- EC regulation No. 20372000 from the 29th of June 2000 This European regulation repeals regulation No. 3093/94 and presents the elimination schedules of CFC and HCFC. It also deals with the collection of refrigerants, system leaks, particularly systems containing more than 3 kg of CFC or HCFC, as well as the minimum level of qualifi cation required by the technicians.
- EC regulation No. 0842/2006 from the 17th of May 2006 regarding the containment, use, collection and disposal of the fl uorinated greenhouse gases, the labelling and elimination of the products and equipment containing these gases, the restriction of use and banning of certain products from the market, as well as the training and certifi cation of personnel and companies operating in the activities targeted by this regulation: refrigeration, air-conditioning, heat pumps and fi re protection systems containing greenhouse gases.

1.9 Other regulations

1.9.1 Control of Substances Hazardous to Health

Under Section 6 of The Health and Safety at Work Act 1974, we are required to provide information on substances hazardous to health. The adhesives and sealants used in this appliance are cured and give no known hazard in this state.

The refrigerant used in this appliance is R410a the use of which is strictly controlled by F Gas regulation EN842/2006.

1.10 Intended use

There is a risk of injury or death to the user or others, or of damage to the product and other property in the event of improper use or use for which it is not intended.

The heat pump is an air/water monoblock system and uses the energy from the outside air to supply heat to the building.

The heat pumps are intended exclusively for domestic use as heat generators for closed heating and hot water central heating systems and for hot water generation.

Intended use includes the following:

- observance of accompanying operating, installation and servicing instructions for the product and any other system components
- installing and fitting the product in accordance with the product and system approval
- compliance with all inspection and maintenance conditions listed in the instructions.

Any other use that is not specified in these instructions, or use beyond that specified in this document, shall be considered improper use. Any direct commercial or industrial use is also deemed to be improper.

Caution.

Improper use of any kind is prohibited.

2 Notes on the documentation

2.1 Observing other applicable documents

► You must observe all the operating and installation instructions included with the system components.

2.2 Storing documents

► Pass these instructions and all other applicable documents on to the system operator.

2.3 Applicability of the instructions

These instructions apply to units with the following type designations and article numbers only:

Type designation	Art. no.
aroTHERM VWL 55/2 A 230 V	0010014566
aroTHERM VWL 85/2 A 230 V	0010011971
aroTHERM VWL 115/2 A 230 V	0010011972
aroTHERM VWL 155/2 A 230 V	0010014567

The seventh to sixteenth digits of the serial number on the identification plate form the article number.

3 System overview

3.1 Safety devices

– The product can work at the following outside temperatures:

	VWL 55/2 A 230 V	VWL 85/2 A 230 V VWL 115/2 A 230 V VWL 155/2 A 230 V
Heating mode	−15 … 28 °C	−20 … 28 °C
Cylinder charging mode	−15 … 46 °C	−20 … 46 °C

– If the product's refrigerant circuit pressure exceeds the maximum pressure of 4.15 MPa (41.5 bar), the high-pressure pressure switch switches the product off. Following a waiting period, the product attempts to start once more. After three failed start attempts in succession, a fault message is displayed.
– If the product is switched off, the crankcase housing heating is switched on when the compressor outlet temperature reaches 7 °C in order to prevent possible damage caused by switching it back on.
– If the compressor inlet temperature and the compressor outlet temperature are below 1 °C, the compressor does not start up.
– A temperature sensor on the compressor outlet limits the product's operation if the measured temperature exceeds the maximum permissible temperature. The maximum permissible temperature depends on the evaporation and condensation temperature.
– The product measures the flow rate of the connected heating circuit when starting up the product.
– If the heating circuit temperature falls below 3 °C, the product's frost protection function is automatically activated as the heating pump is started. In addition, frost protection agent should be added to the heating water as the heating water temperature may fall below the freezing point in the event of a power cut, which poses a risk of frost to the heating installation.

Note
Operating the heat pump outside the application limits results in the heat pump being switched off by the internal control and safety devices.

3.2 Design of the heat pump system

The heat pump system consists of the following components:

– aroTHERM heat pump
– VWZ AI heat pump control module
– Additional hydraulic components, if required
– VRC 470 system controller

The heat pump can be operated by the VWZ AI heat pump control module. The extended operation of the heat pump is carried out by the system controller.

3.3 Functionality

The product comprises the following circuits:

– The coolant circuit releases heat into the heating circuit by means of evaporation, compression, condensation and expansion
– The heating circuit

3.3.1 Heating mode

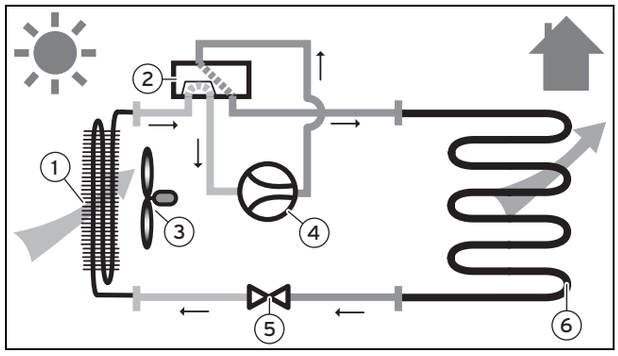

1	Evaporator	4	Compressor
2	4-way valve	5	Electronic expansion valve
3	Fan	6	Plate heat exchanger

3.3.2 Thawing

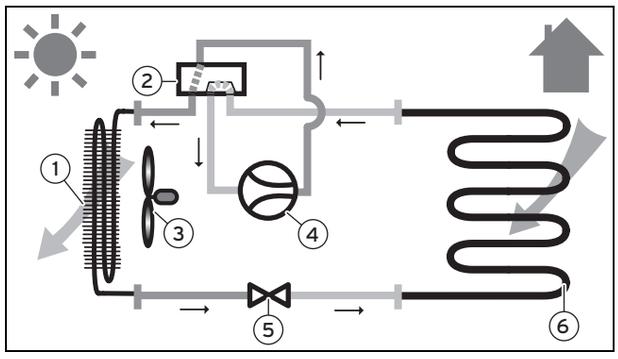

1	Evaporator	2	4-way valve

3	Fan	5	Electronic expansion valve
4	Compressor	6	Plate heat exchanger

3.3.3 Application limits

Operation of the pump outside the application limits results in the heat pump being switched off by the internal control and safety devices.

3.3.3.1 Application limits in heating mode (VWL 55/2 A 230 V)

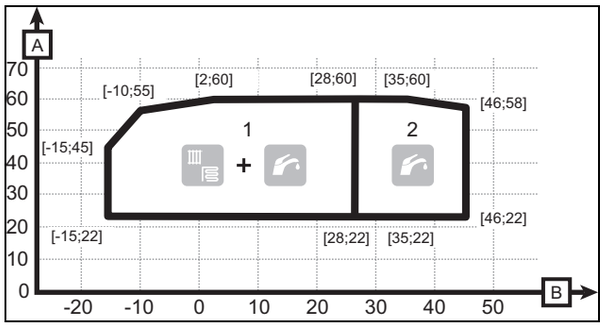

1	Heating mode application limits	A	Water temperature
2	Hot water generation application limits	B	Air temperature

3.3.3.2 Application limits in heating mode (VWL 85/2 A 230 V, VWL 115/2 A 230 V, VWL 155/2 A 230 V)

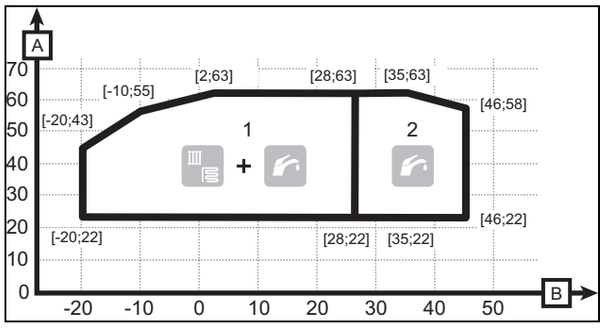

1	Heating mode application limits	A	Water temperature
2	Hot water generation application limits	B	Air temperature

3.4 System diagram (VWL 55/2 A 230 V)

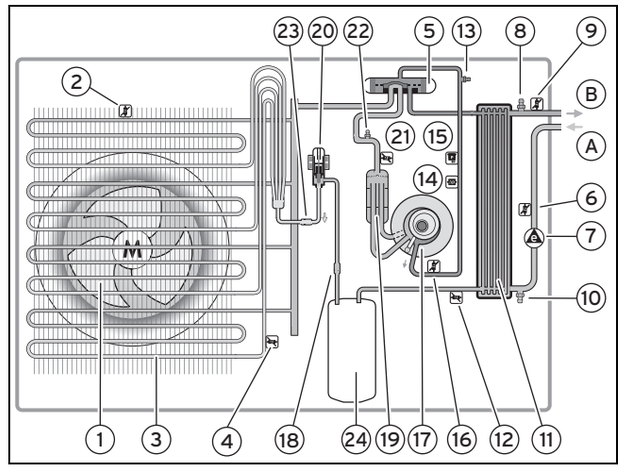

1	Fan	14	High-pressure pressure switch in the coolant circuit
2	Air inlet temperature sensor	15	High-pressure sensor in the coolant circuit
3	Ribbed pipe heat exchanger	16	Compressor outlet temperature sensor
4	Temperature sensor of the ribbed pipe heat exchanger	17	Rotary piston compressor
5	4-way valve	18	Filter
6	Return heating circuit temperature sensor	19	Liquid separator
7	High-efficiency pump with flow sensor	20	Electronic expansion valve
8	Purging valve	21	Compressor inlet temperature sensor
9	Flow heating circuit temperature sensor	22	Service valve for the low-pressure range of the coolant circuit
10	Drain valve	23	Filter
11	Plate heat exchanger	24	Fluid collector
12	Temperature sensor after the plate heat exchanger	A	Heating return
13	Service valve for the high-pressure range of the coolant circuit	B	Heating flow

3.5 System diagram (VWL 85/2 A 230 V, VWL 115/2 A 230 V, VWL 155/2 A 230 V)

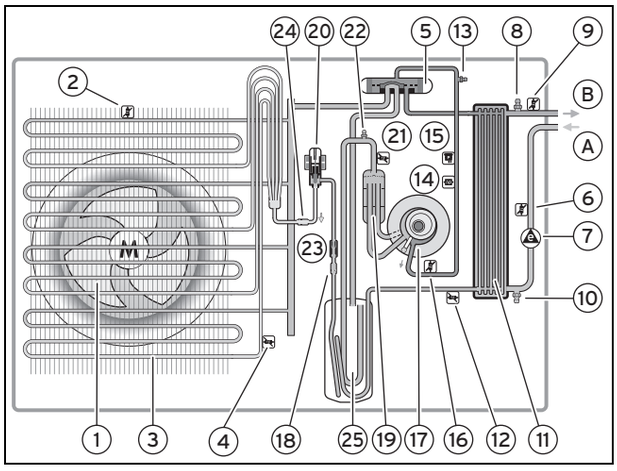

1 Fan
2 Air inlet temperature sensor
3 Ribbed pipe heat exchanger
4 Temperature sensor of the ribbed pipe heat exchanger
5 4-way valve
6 Return heating circuit temperature sensor
7 High-efficiency pump with flow sensor
8 Purging valve
9 Flow heating circuit temperature sensor
10 Drain valve
11 Plate heat exchanger
12 Temperature sensor after the plate heat exchanger
13 Service valve for the high-pressure range of the coolant circuit
14 High-pressure pressure switch in the coolant circuit
15 High-pressure sensor in the coolant circuit
16 Compressor outlet temperature sensor
17 Rotary piston compressor
18 Filter
19 Liquid separator
20 Electronic expansion valve
21 Compressor inlet temperature sensor
22 Service valve for the low-pressure range of the coolant circuit
23 Flow rate limiter (cooling mode) on the VWL 85/2 A 230 V only
24 Filter
25 Gas buffer
A Heating return
B Heating flow

4 Overview of the equipment

4.1 Type designation and serial number

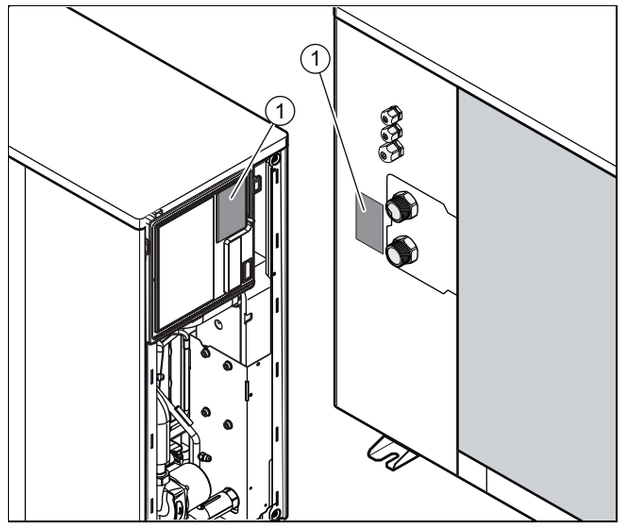

The type designation and serial number are on the identification plate **(1)**.

4.2 Information on the identification plate

Information on the identification plate	Meaning
Serial no.	Unique unit identification number
P max	Maximum rated power
I	Max. operating current
I max	Maximum start-up current
R410A	Coolant type and fill quantity
PS_R_LP PS_R_HP	Min. and max. operating pressure in the coolant circuit
PS_H min PS_H max	Minimum and maximum operating pressure in the heating circuit
COP (Ax/Wxx)	Output figure (coefficient of performance) at an air inlet temperature of xx °C and a heating flow temperature of xx °C
(Ax/Wxx)	Heating output at an air inlet temperature of xx °C and a heating flow temperature of xx °C
Volt	Compressor, pump and controller mains voltage
Hz	Power frequency
IP	Protection class
	Compressor
	Ventilator
	Pump
	Controller

5 Assembly and installation

5.1 Preparing for fitting and installation

5.1.1 Delivery, transport and positioning

5.1.1.1 Transporting the product

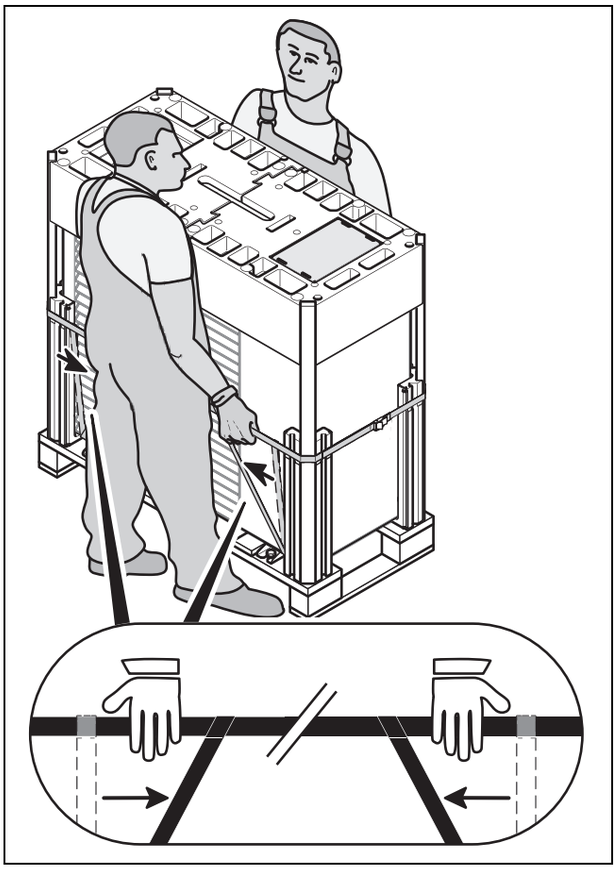

Warning.

Risk of injury from lifting a heavy weight.

Lifting weights that are too heavy may cause injury to the spine, for example.

- ► When transporting the product, two people should lift it.
- ► Observe the product weight stated in the technical data.
- ► When transporting heavy loads, observe the applicable directives and regulations.

Caution.

Risk of material damage due to incorrect transportation.

Regardless of the mode of transport, the heat pump must never be tilted by more than 45°. Otherwise, this may lead to malfunctions in the coolant circuit during subsequent operation. In the worst case scenario, this may lead to a fault in the whole system.

- ► During transport, do not tilt the heat pump by any more than the maximum angle of 45°.

1. Use the transportation belt to carry the product to the final installation site.
2. Only lift the product from the back and side where the hydraulic connections are located.
3. When transporting the product using a hand truck, secure the product using a belt.
4. In order to avoid scratches and damage, protect the sides of the product that come into contact with the hand truck.

5.1.1.2 Unpacking the product

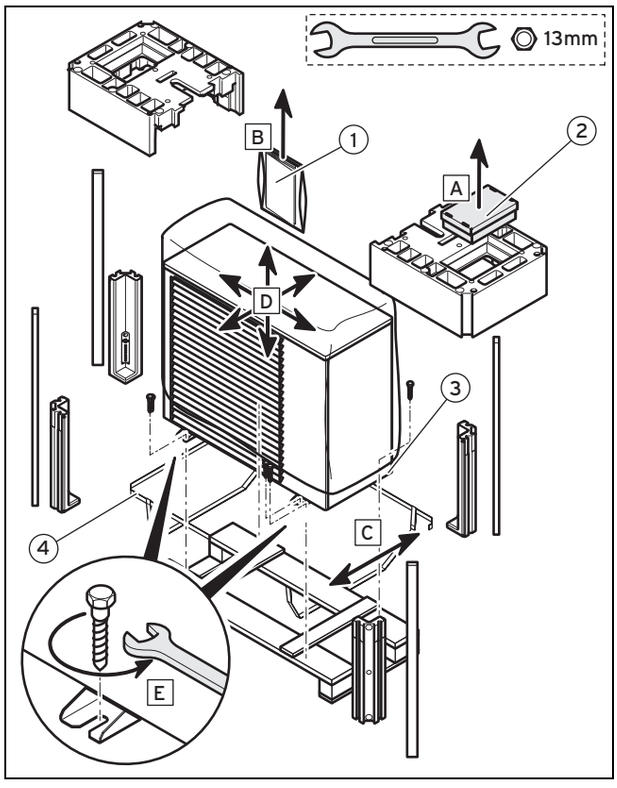

1. Remove the accessory **(2)**.
2. Remove the documentation supplied **(1)**.
3. Remove the transport belt **(4)**.
4. Carefully remove the packaging and padding without damaging the product **(3)**.
5. Remove the screws from the pallet at the front and rear of the product.

5.1.1.3 Checking the scope of delivery

► Check the contents of the packaging units

Quantity	Description
1	Condensate discharge
1	Bag with seals
4	Vibration-isolating feet
1	Purge hose

5.1.2 Complying with clearances and installation clearances

5.1.2.1 Unit dimensions and connection dimensions

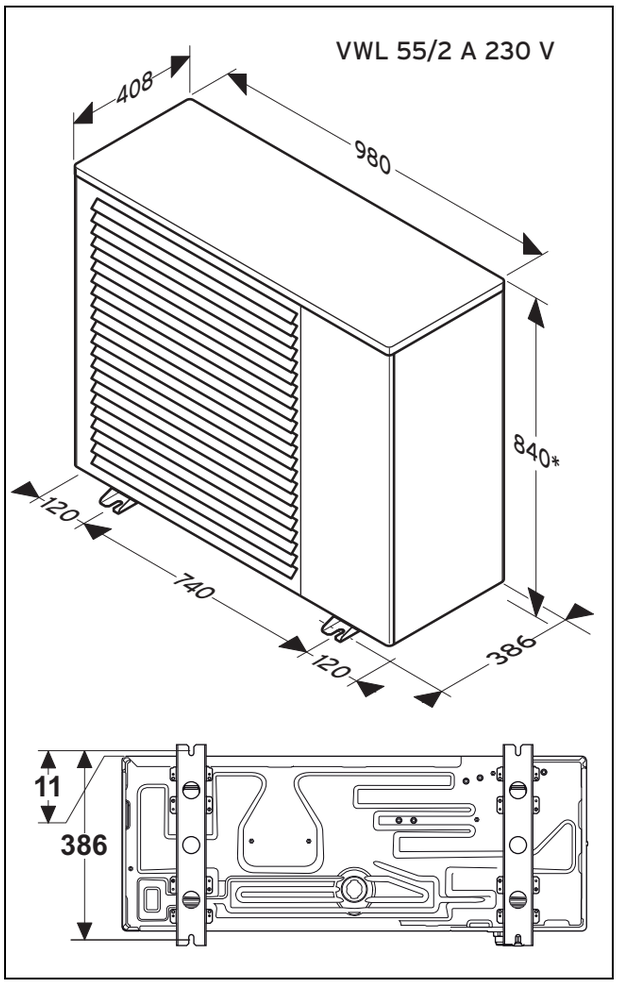

* Size increases by 45 mm when using the vibration dampers supplied.

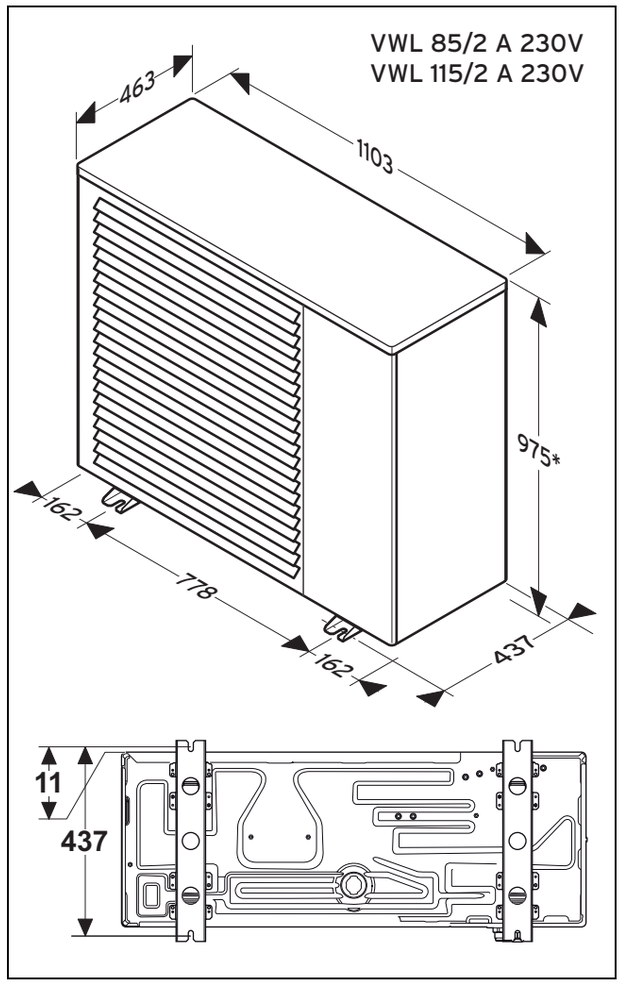

* Size increases by 45 mm when using the vibration dampers supplied.

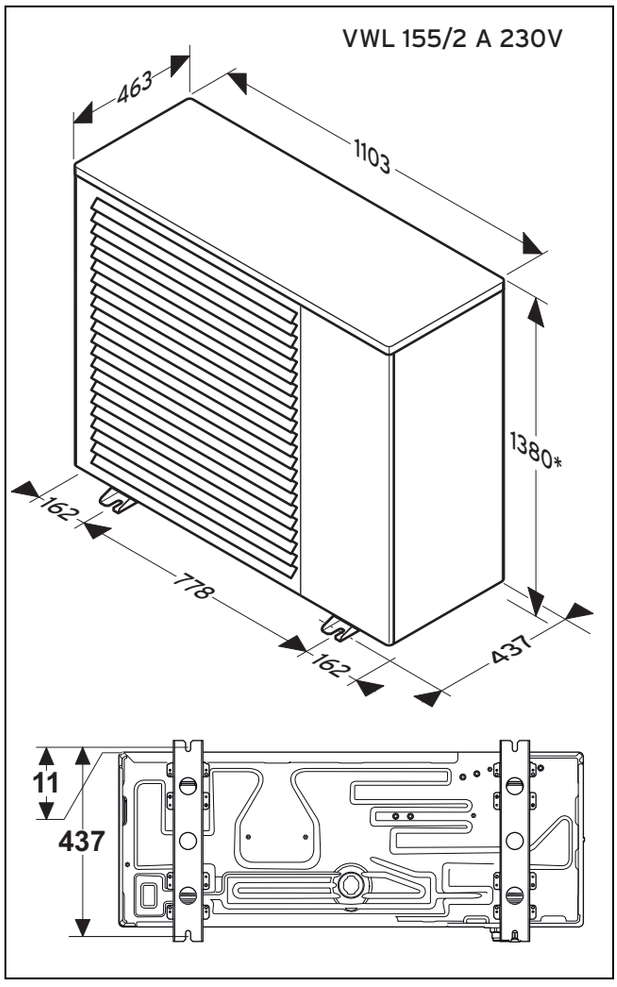

* Size increases by 45 mm when using the vibration dampers supplied.

5.1.2.2 Installation clearance

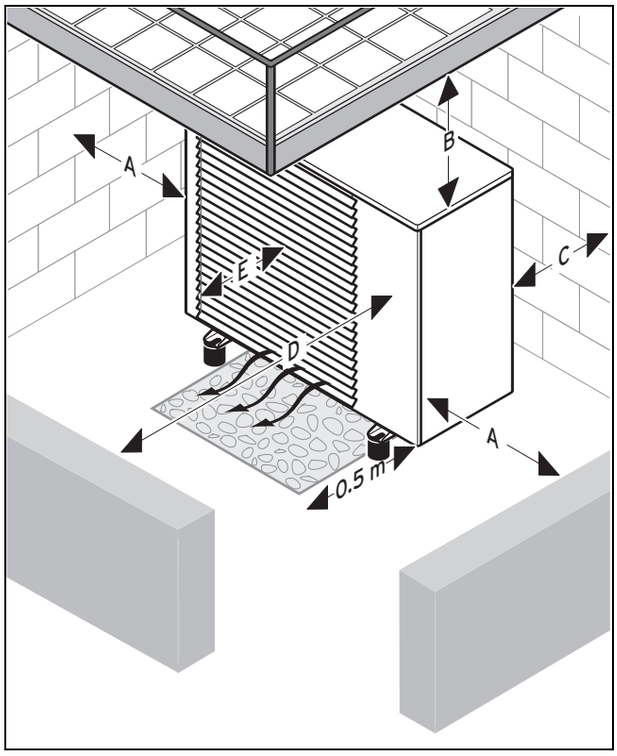

Clearance	For heating mode
A	> 250 mm
B	> 1000 mm
C	> 120 mm*
D	> 600 mm
E	> 300 mm

***Caution:** If the minimum clearances are not maintained, the efficiency of the product may be affected.

- ► To guarantee sufficient air flow and to facilitate maintenance work, observe the minimum clearances that are specified above.
- ► Ensure that there is sufficient room to install the hydraulic lines.
- ► If the product is to be installed in areas where heavy snow falls, ensure that the snow does not accumulate around the product and that the minimum clearances specified above are observed. If you cannot ensure this, install an additional heat generator in the heating circuit. An elevating socket is available as an accessory. In order to adapt the product to higher levels of snow, only use the Vaillant elevating socket.

5.1.2.3 Selecting the installation site

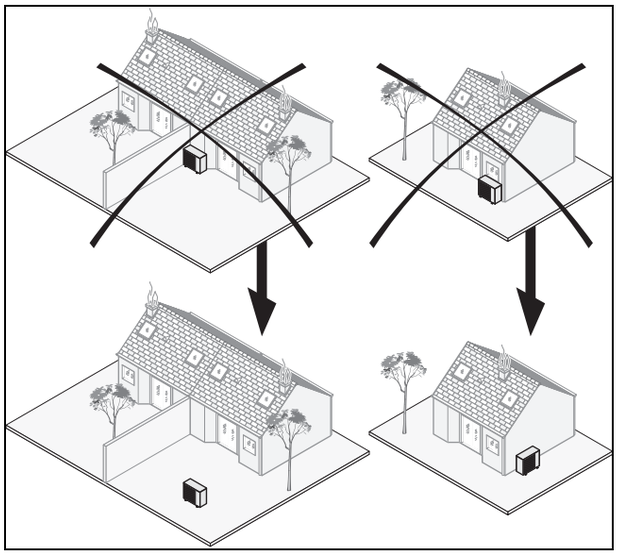

- Observe all valid regulations.
- Install the product outside the building.
- Do not install the product:
  - Near a heat source,
  - Near flammable materials,
  - Near ventilation openings for adjacent buildings,
  - Under deciduous trees.
- Note the following points when installing the product:
  - Prevailing winds,
  - The visual impression on the environment
- Avoid places where strong winds blow on the product's air outlet.
- Point the fan away from nearby windows. Install noise protection if necessary.
- Install the product on one of the following supports:
  - Concrete slab,
  - Steel T-beam,
  - Concrete block,
  - Elevating socket (Vaillant accessory),
  - Wall bracket (permitted Vaillant accessory for VWL 55/2 A 230 V, VWL 85/2 A 230 V and VWL 115/2 A 230 V or VWL 115/2 A 400 V).
- Do not expose the product to dusty or corrosive air (e.g. near unsecured streets).
- Do not install the product near ventilation shafts.
- Prepare the routing for the electrical lines.

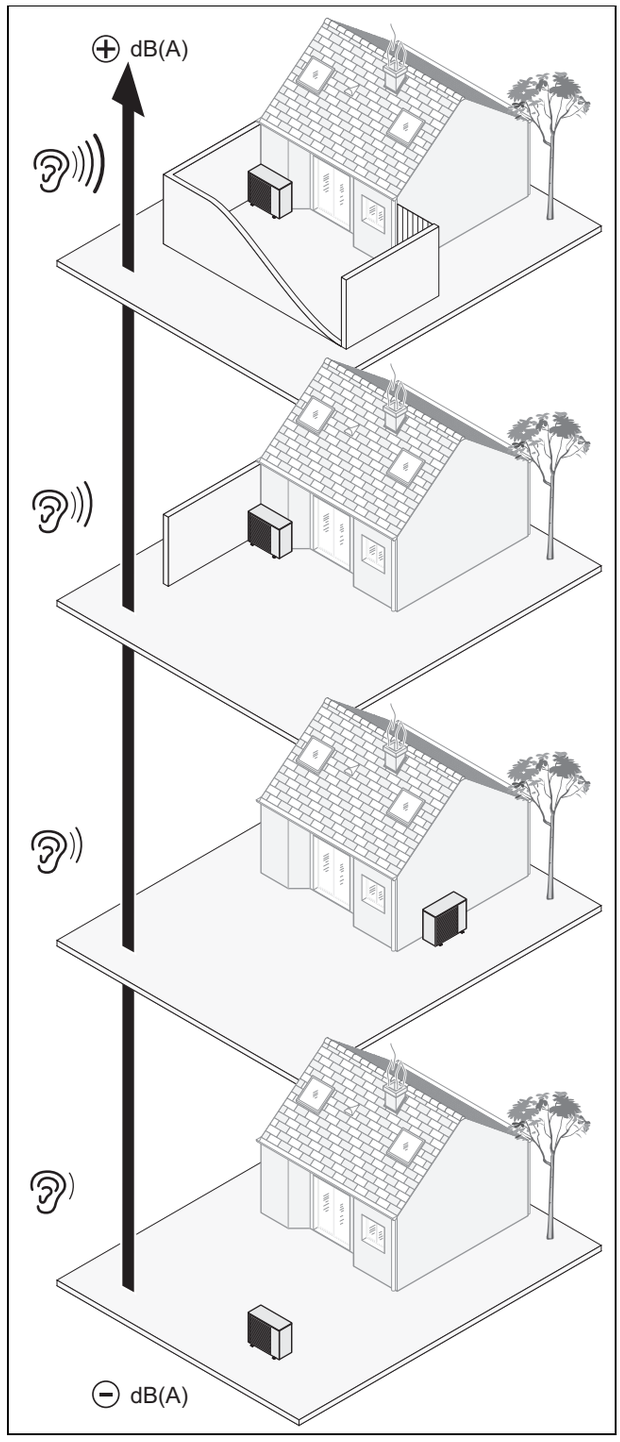

- Note any noise emissions from the fan and compressor.

5.1.2.4 Installing the heat pump

1. Note the safety information in this manual and in the operating instructions before installing the product.
2. Install the product on steel beams, concrete blocks or using a wall holder (accessory).
3. Ensure that no water collects under the product.
4. In order to avoid ice formation, ensure that the ground in front of the product can absorb water well.

5.1.2.5 Preparing the condensate discharge

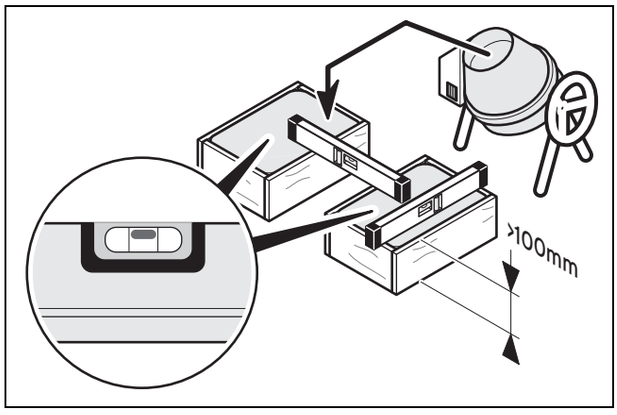

Danger!
Risk of injury due to frozen condensate.

Frozen condensate on paths may cause falls.

- Ensure that condensate does not discharge onto paths and that ice cannot build up there.

The condensate is discharged centrally underneath the product.

The condensate is heated inside the product and routed into the condensate discharge.

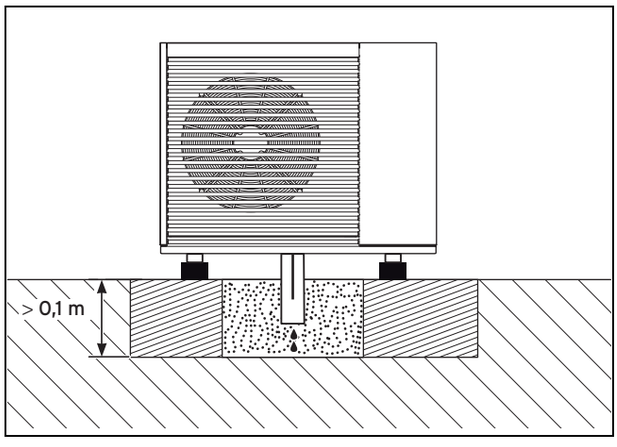

- Prepare the condensate discharge using a drain line or in a gravel bed.

5.2 Carrying out the installation

5.2.1 Removing the side casing

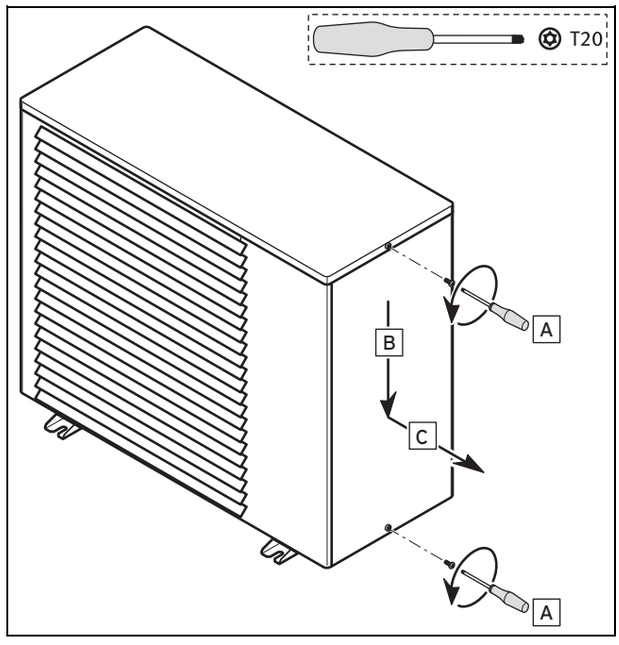

1. Remove both screws **(A)**.
2. Pull the side casing downwards and then forwards.

Note
Note that the required tool is not included in the scope of delivery.

5.2.2 Aligning the product

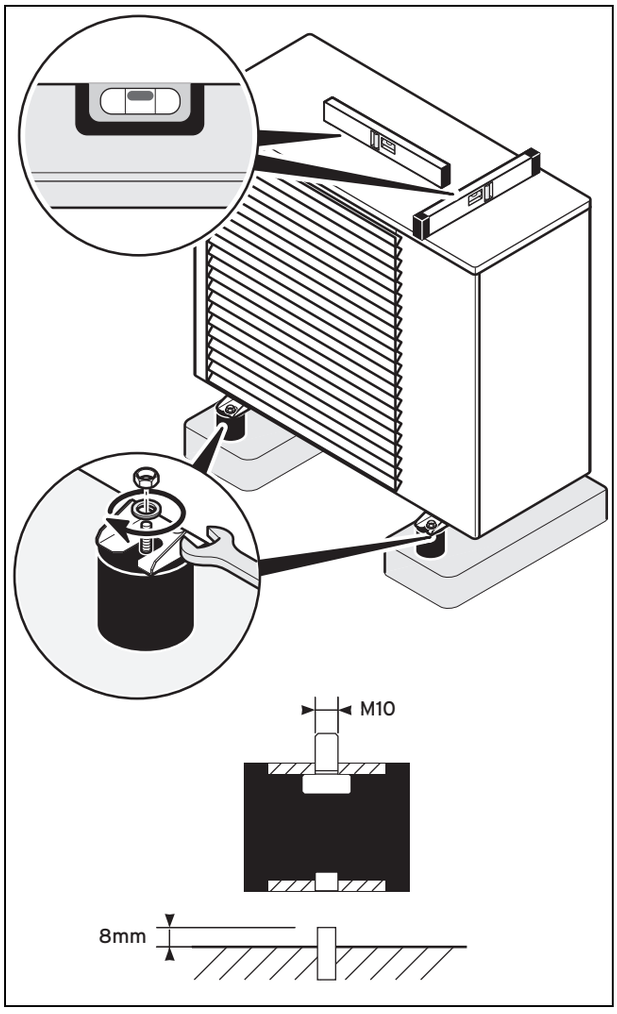

1. Only use bolts of a specific length.
   – Maximum length: ≤ 8 mm
2. Align the product horizontally so that condensate can flow.

Note
The product must be installed with the vibration-isolating feet supplied. The product is lifted by the vibration-isolating feet, which simplifies the condensate-discharge process and reduces vibrations.

3. Screw in the vibration-damping feet using the concrete foundation.

Note
The concrete foundation must not be joined to the house foundations.

5.3 Hydraulics installation

In heating installations that are equipped primarily with thermostatic or electrically controlled valves, a constant and sufficient flow through the heat pump must be ensured. Irrespective of which heating installation is selected, the minimum volume of circulating heating water (40% of the nominal flow, see the technical data table) must be guaranteed.

5.3.1 Carrying out the hydraulics installation

Caution.
Risk of damage caused by residue in the heating flow and return.

Residue from the pipelines, such as welding beads, scale, hemp, putty, rust and coarse dirt, may be deposited in the product and cause malfunctions.

► Flush the heating installation thoroughly before connecting the product in order to remove any possible residue.

Caution.
Risk of material damage due to corrosion.

If plastic pipes that are not diffusion-tight are used in the heating circuit, this may lead to corrosion and deposits in the heating circuit and in the product.

► Do not treat the water with corrosion protection agents if plastic pipes that are not diffusion-tight are used.

Danger!
Risk of material damage caused by soldering work.

Carrying out soldering work on lines that have already been installed may damage the seals.

► Solder the lines before installing the product.

1. Insulate the lines (including those running below ground) with UV-resistant and high-temperature-resistant insulation between the product and the heating installation.
2. In order to avoid transferring vibrations to the surrounding buildings, use flexible connection pipes on the product that have a length of at least 0.75 m.
3. When the product is not installed at the highest point in the heating circuit, install additional purging valves in places where air can collect (elevated points in the system).
4. Install the following accessories in the heating return.

Installation without decoupling hydraulic module
– Drain cock – Air separator (if required) – Dirt filter – An expansion vessel suitable for the complete hydraulic installation – Expansion relief valve 0.3 MPa (3 bar) – Pressure gauge (recommended)

Note
If you use glycol, you must collect it at the expansion relief valve to prevent environmental pollution.

Note
Improper purging of the heating circuit may cause pump faults due to a low flow rate (F.532).

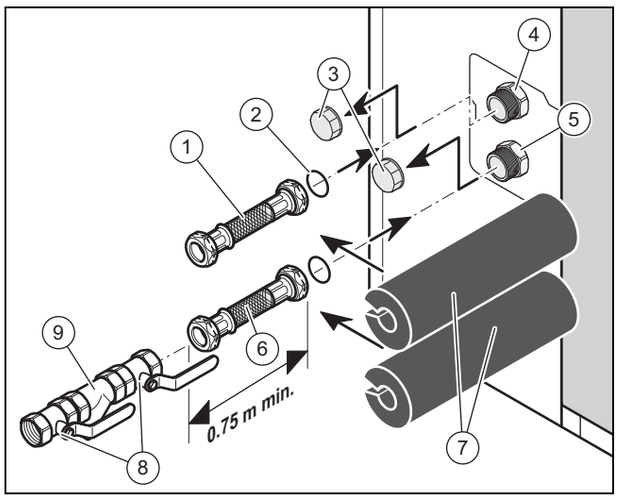

1	Connection hose in the heating flow to the building (on-site)	5	Heating return connection (diameter 1 1/4") to the heat pump
2	O-ring seal	6	Connection hose in the heating return to the heat pump (on-site)
3	Covering cap	7	Insulation (on-site)
4	Heating flow connection (diameter 1 1/4") to the building	8	Stop valve
		9	Dirt filter

5. Remove the covering caps **(3)** from the product's hydraulic connections.
6. Install a dirt filter **(9)** in the heating circuit return between two stop valves **(8)** so that the filter can be cleaned regularly.
7. Install a flexible connection pipe **(1)** and **(6)** (to be provided on-site) with an O-ring and a stop valve to each of the connections for the heat pump heating flow and return.
8. Check the connections for tightness.

5.3.2 Connecting the swimming pool (optional)

Danger!
Risk of material damage due to a direct connection to a swimming pool.

If the product is directly connected to a swimming pool, damage may be caused by corrosion.

► Do not connect the heat pump heating circuit directly to a swimming pool.

► If you want to connect a swimming pool to the heating circuit, note the components (expansion vessels, etc.) that are required for the installation.

5.3.3 Connecting the condensate drain pipework

Note
Observe all valid national regulations and rules.

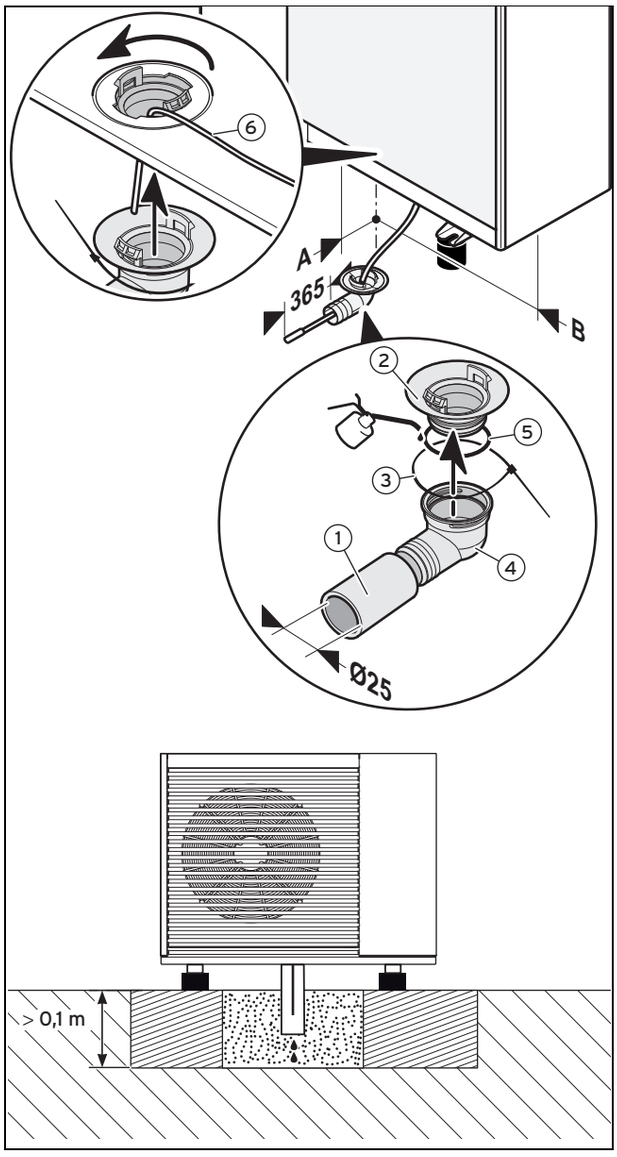

1	Condensate drain pipe	4	Elbow
2	Adaptor	5	Seal
3	Cable tie	6	Heating wire

1. Observe the various installation dimensions for the products.

Product	Dimension	Value
– VWL 55/2	A	70.0 mm
	B	490.0 mm
– VWL 85/2 – VWL 115/2 – VWL 155/2	A	102.5 mm
	B	550.0 mm

2. Pull the heating wire **(6)** in the condensate pan until it is in the elbow **(4)**.
3. Connect the elbow **(4)** and adaptor **(2)** to the seal **(5)** and secure them both using a cable tie **(3)**.
4. Connect a condensate drain pipe to the elbow.
5. Install the heating wire in the condensate drain pipe **(1)** in order to prevent the condensate from freezing in the line.
6. Connect the adaptor **(2)** with the product's floor plate and secure it with a 1/4 rotation.
7. Make sure that the condensate drain pipe ends in a gravel bed.

Note
The condensate drain pipe must not be longer than 365 mm, otherwise it may freeze over.

8. Route the condensate drain pipework with a downward gradient.

5.4 Carrying out the electrical installation

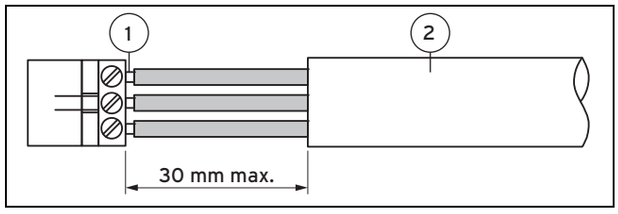

1	Connecting wires	2	Insulation

Danger!
Risk of death from electric shock as a result of an improper electrical connection!

An improper electrical connection may negatively affect the operational safety of the product and result in material damage or personal injury.

► The electrical installation must be carried out by a suitably qualified competent person who is responsible for complying with the existing standards and directives.

1. Only strip a maximum of 3 cm from the outer sheathing of the flexible lines.
2. Secure the conductors in the connection terminals.

5.4.1 Establishing the power supply

The external mains connection cable must be earthed and connected with the correct polarity and in accordance with the valid regulations.

► Check that the mains connection cable is connected correctly.

The cables that connect the product to the fuse box must:

– Be suitable for fixed installation,
– Be weatherproof,
– Be equipped with a wire cross-section that is necessary for the product performance.

► Connect the product using a fixed connection and a partition with a contact opening of at least 3 mm (e.g. fuses or power switches).

In order to meet the overvoltage category II requirements, further fuse protection may be required.

To meet the overvoltage category III conditions, the partitions must ensure a complete separation of the power supply.

5.4.2 Standard tariff

5.4.2.1 230 V connection

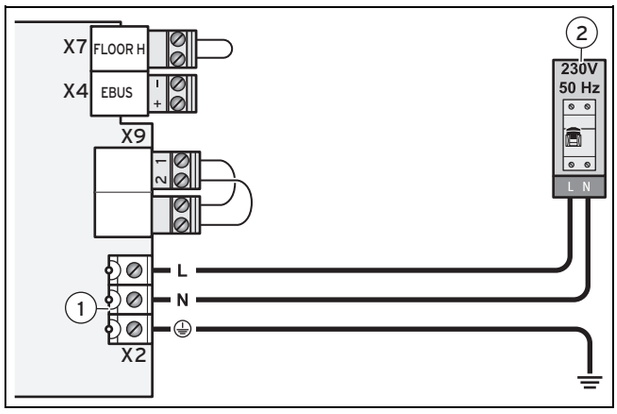

1	Mains connection terminal in the product	2	Partition

Caution.

Risk of material damage due to high connected voltage.

At mains voltages greater than 253 V, electronic components may be damaged.

- ► Ensure that the rated voltage of the mains is 230 V (+10%/-15%) ~ 50 Hz.

- ► Connect the mains connection cable to the product's power supply connection.
- ► To ensure that people are safe, install a separate 30 mA residual-current-operated circuit-breaker for the heat pump.
- ► Guide the mains connection cable through the product's cable duct (PEG screwed connection).

5.4.3 Laying the 24 V cabling

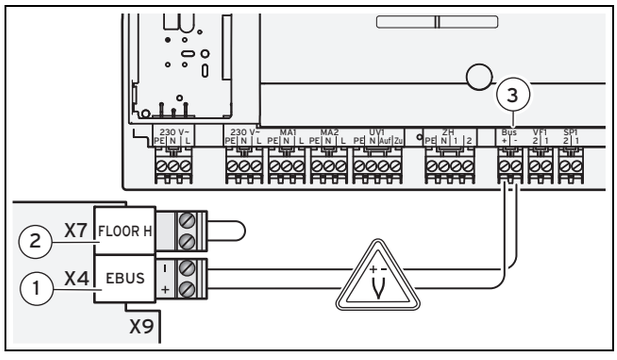

1	eBUS connection in the heat pump (observe the polarity)	3	eBUS connection in the VWZ AI heat pump control module or in the hydraulic station
2	Limit thermostat connection (underfloor protective circuit)		

1. Feed the cable through the cable duct.

	VWL 55/2 A 230 V VWL 85/2 A 230 V VWL 115/2 A 230 V VWL 155/2 A 230 V
Recommended eBUS cable dimension	2 x 0.75 mm²
Recommended cable dimension for eBUS + limit thermostat	4 x 0.75 mm²

2. Connect the eBUS cable to the system controller.
3. If you install a limit thermostat (e.g. 50 °C) in the heating circuit flow, remove the bridge from terminal **(2)** and connect the limit thermostat to this terminal.

5.4.4 Installing the cable duct

Caution.

Risk of malfunction due to incorrect routing of the supply lines.

If you route the supply lines for the power supply and the eBUS line through the same cable duct, the signal will be disrupted.

- ► Route the supply lines for the power supply and the eBUS line through various cable ducts in the product.

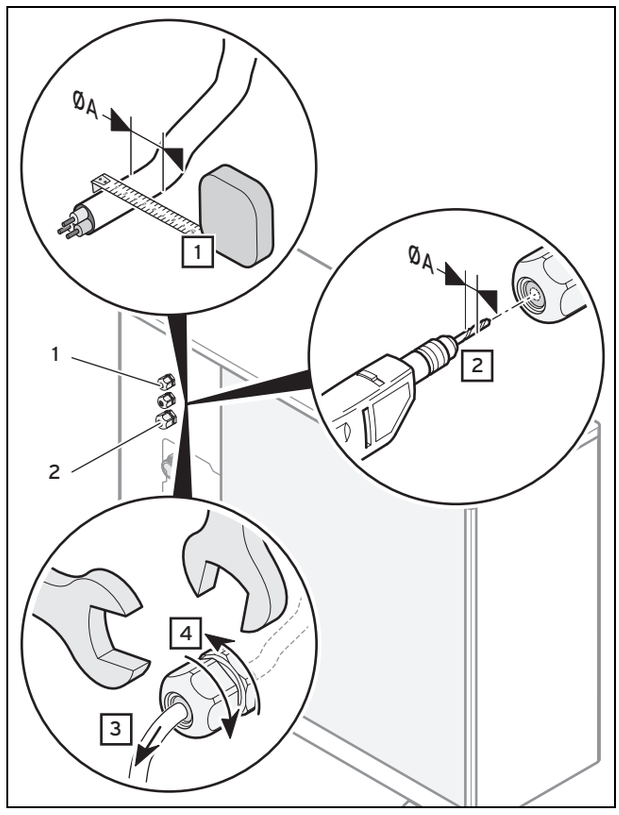

1	eBUS line and limit thermostat line cable duct	2	Power supply cable duct

1. Measure the diameter of the cable.
2. Drill a hole the same size as the cable diameter in the cable duct.
3. Route the cable through the cable duct.
4. Tighten the cable duct with two open-end spanners.

5.5 Connection diagrams

5.5.1 Connection diagram (VWL 55/2 A 230 V, VWL 85/2 A 230 V, VWL 115/2 A 230 V, VWL 155/2 A 230 V)

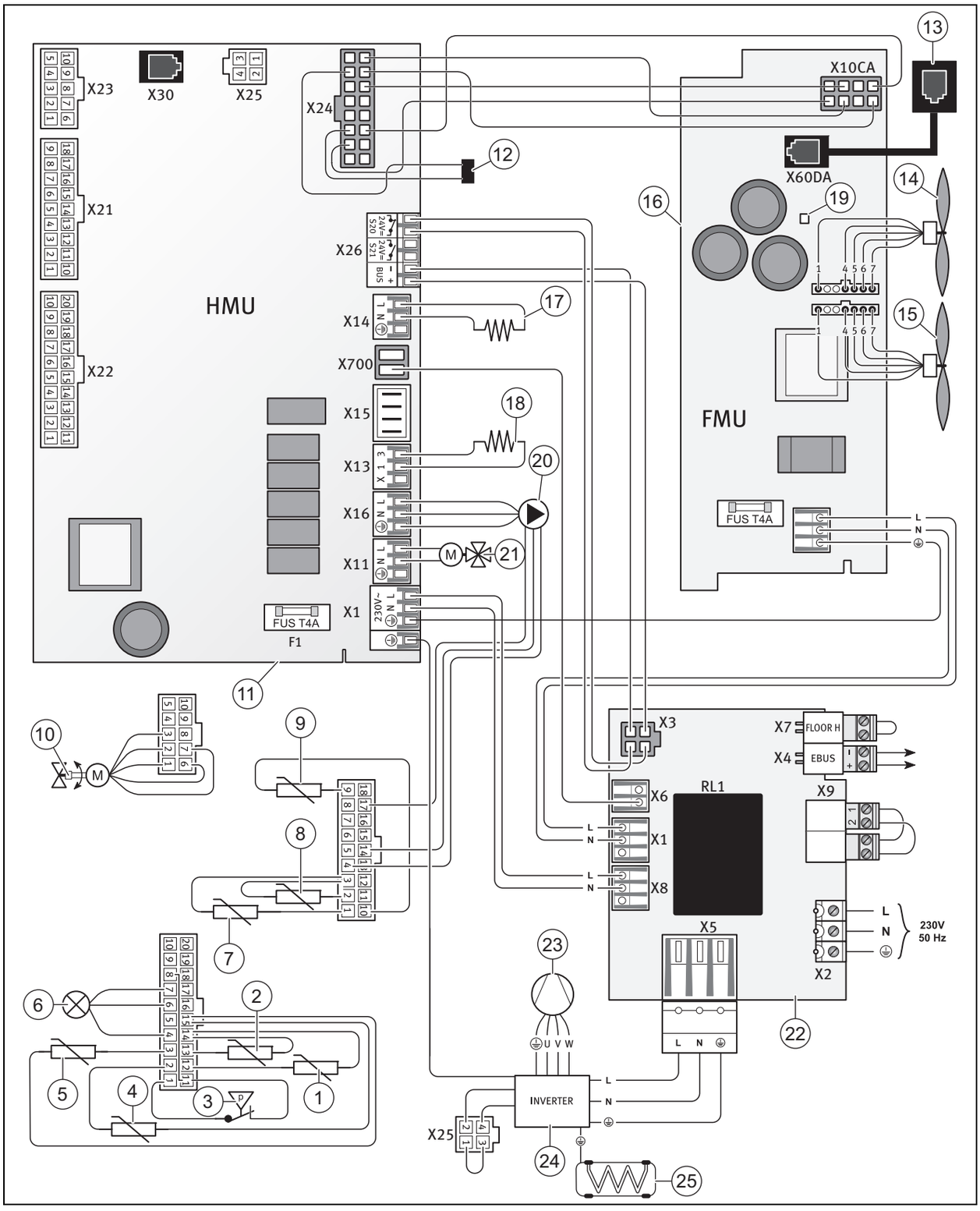

1	Temperature sensor of the ribbed pipe heat exchanger	5	Compressor outlet temperature sensor
2	Temperature sensor after the plate heat exchanger	6	Coolant circuit temperature sensor
3	Coolant circuit pressure switch	7	Heat pump heating flow temperature sensor
4	Compressor inlet temperature sensor	8	Heat pump heating return temperature sensor

9	Air inlet temperature sensor
10	Electronic expansion valve
11	Main PCB
12	Coding resistance
13	Diagnosis software connection
14	Fan 1
15	Fan 2 (for VWL 155/2 only)
16	Fan PCB
17	Crankcase heating
18	Drain pan electrical heating rod
19	LED status display
20	Heating circuit high-efficiency pump with flow sensor
21	4-way valve
22	PCB installation
23	Rotary piston compressor
24	Inverter box
25	Temperature sensor for ribbed pipe heat exchanger

6 Start-up

6.1 Run the start-up

1. Before starting up the product, read through the operating instructions.
2. Check that the electrical partition is installed.
3. Check that the hydraulic and electric connections are correctly designed.
4. Check that a dirt filter is installed in the heat pump return.
5. Check whether an expansion relief valve, an expansion vessel and a pressure gauge are installed.
6. Check the leak-tightness of the connections.
7. Open all the heating circuit valves.

6.2 Heat pump operating concept

Caution.

Risk of material damage caused by incorrect handling.

Incorrect settings at installer level may cause damage to the heating installation.

► Only access the installer level if you are an approved competent person.

The operating concept and operation of the heat pump is described in the operating instructions for the heat pump.

Menu → Installer level

– You can call up the installer level using code 17.

6.3 Running through the installation assistant

The installation assistant is launched when the heat pump is switched on for the first time.

You must confirm the launching of the installation assistant. Once confirmed, all heating demands from the heat pump are blocked. This status remains until the installation assistant is completed or cancelled.

Set the system diagram number in the heat pump control module VWZ AI.

6.3.1 Setting the language

Menu → Basic setting → Language

– You can use this function to set the desired language.

6.3.2 Telephone number for the competent person

You can store your telephone number in the appliance menu.

The operator can display it in the information menu. The telephone number can be up to 16 digits long and must not contain any spaces. If the telephone number is shorter, end the entry after the last digit by pressing the right-hand selection button [ ].

All of the digits to the right will be deleted.

6.4 Calling up Live Monitor (checking status codes)

Menu → Live Monitor

– You can use this function to call up the status code of the heat pump, which provides you with information about the current operating condition of the heat pump.

6.5 Calling up statistics

Menu → Installer level → Test menu → Statistics

– You can use this function to call up the statistics for the heat pump.

6.6 Filling the heating circuit

Note

We recommend using ethylene glycol with corrosion-inhibiting additives.

If no frost protection has been poured in, the product will not be protected in the event of a power cut when there is frost.

Conditions: SW10 open-end spanner

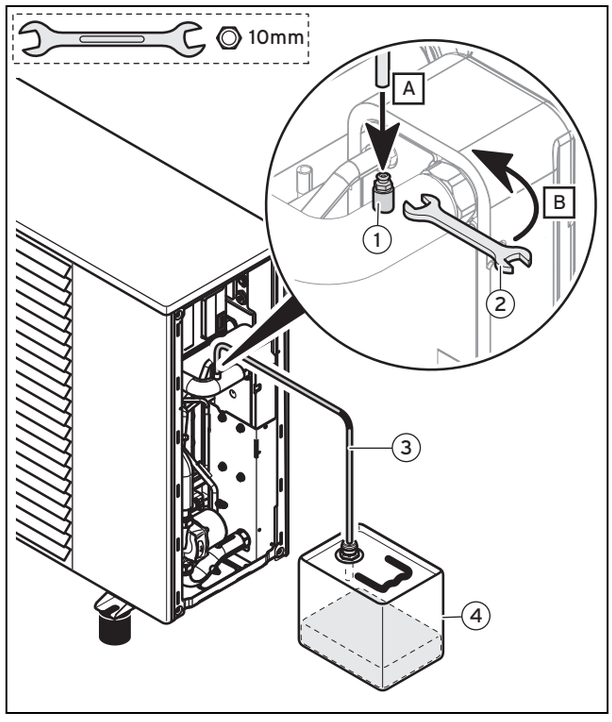

1	Heating circuit purging valve		
2	Open-end spanner (on-site)	4	Collecting container (on-site)
3	Hose		

► Purge the heating circuit during the filling process, see Purging the heating circuit (→ Page 23).

► Connect one end of the hose **(3)** to the heating circuit's purging valve **(1)**.

► When purging, insert the other end of the hose **(3)** into the mixing container **(4)**.

► Open the heating circuit's purging valve **(1)** with an open-end spanner **(2)**.

- To purge the heating circuit, open the heating circuit's purging valve **(1)** by a 1/4 rotation **(B)** using an open-end spanner.
- Increase the operating pressure in the heat pump heating circuit.
  - Operating pressure: 0.15 … 0.2 MPa (1.50 … 2.0 bar)

Note
The pressure level may fall in the first month following start-up. It may also vary depending on the outside temperature.

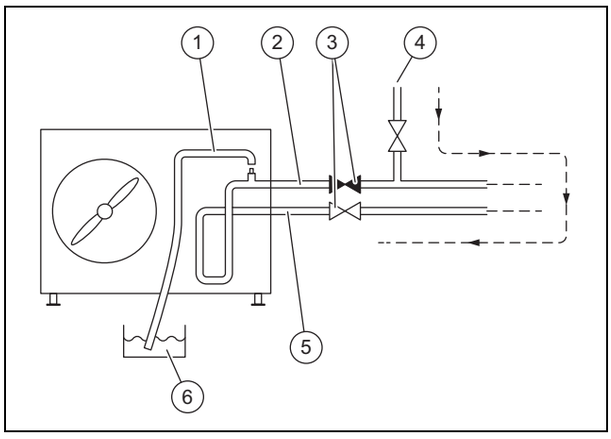

1	Drain hose	4	Water/glycol supply
2	Heating flow	5	Heating return
3	Stop valve	6	Collecting container

- Close the stop cock in the heating flow.
- Fill the heating circuit via the heating return.
  - ◁ Air collects at the purging valve.

Conditions: If you are using glycol

- The glycol must not escape into the outflow or the environment.
- Prepare a mixture with suitable glycol (max. 50% ethylene glycol) in order to protect the heat pump against frost according to the regional minimum temperatures.

Note
If no frost protection has been poured in, the product will not be protected in the event of a power cut when there is frost.

- Use a frost protection tester to ensure the correct dosage.

6.7 Checking and treating the heating water/filling and supplementary water

Caution.
Risk of material damage due to poor-quality heating water

- Ensure that the heating water is of sufficient quality.

- Before filling or topping up the system, check the quality of the heating water.

Checking the quality of the heating water

- Remove a little water from the heating circuit.
- Check the appearance of the heating water.
- If you ascertain that it contains sedimentary materials, you must desludge the system.
- Use a magnetic rod to check whether it contains magnetite (iron oxide).
- If you ascertain that it contains magnetite, clean the system and apply suitable corrosion-protection measures, or fit a magnet filter.
- Check the pH value of the removed water at 25 °C.
- If the value is below 8.2 or above 10.0, clean the system and treat the heating water.

Checking the filling and supplementary water

- Before filling the system, measure the hardness of the filling and supplementary water.

Treating the filling and supplementary water

- Observe all applicable national regulations and technical standards when treating the filling and supplementary water.

Provided the national regulations and technical standards do not stipulate more stringent requirements, the following applies:

You must treat the heating water in the following cases:

- If the entire filling and supplementary water quantity during the operating life of the system exceeds three times the nominal volume of the heating installation, or
- If the guideline values listed in the following table are not met, or
- If the pH value of the heating water is less than 8.2 or more than 10.0.

Total heating output	Water hardness at specific system volume[1)]					
	≤ 20 l/kW		> 20 l/kW ≤ 50 l/kW		> 50 l/kW	
kW	ppm $CaCO_3$	mol/m³	ppm $CaCO_3$	mol/m³	ppm $CaCO_3$	mol/m³
< 50	**< 300**	**< 3**	**200**	**2**	**2**	**0.02**
> 50 to ≤ 200	200	2	150	1.5	2	0.02
> 200 to ≤ 600	150	1.5	2	0.02	2	0.02
> 600	2	0.02	2	0.02	2	0.02

1) Nominal capacity in litres/heating output; in the case of multi-boiler systems, the smallest single heating output is to be used.

Caution.

Risk of material damage if the heating water is treated with unsuitable additives.

Unsuitable additives may cause changes in the components, noises in heating mode and possibly subsequent damage.

► Do not use any unsuitable frost and corrosion protection agents, biocides or sealants.

No incompatibility with our products has been detected to date with proper use of the following additives.

► When using additives, follow the manufacturer's instructions without exception.

We accept no liability for the compatibility of any additive or its effectiveness in the rest of the heating system.

Additives for cleaning measures (subsequent flushing required)

– Fernox F3
– Sentinel X 300
– Sentinel X 400

Additives intended to remain permanently in the system

– Fernox F1
– Fernox F2
– Sentinel X 100
– Sentinel X 200

Additives for frost protection intended to remain permanently in the system

– Fernox Antifreeze Alphi 11
– Sentinel X 500

► If you have used the above-mentioned additives, inform the operator about the measures that are required.
► Inform the operator about the measures required for frost protection.

6.8 Filling the heating installation

Caution.

Risk of material damage due to heating water that is extremely calciferous or corrosive or contaminated by chemicals.

Unsuitable tap water damages the seals and diaphragms, blocks components in the product and heating installation through which the water flows and causes noise.

► Only fill the heating installation with suitable heating water.

Note

If a heat exchanger module is used, the heating circuit must be topped up with heating water.

Conditions: System separation with a heat exchanger module

► Connect the filling cock with the heating water supply using a cold water valve where possible.
► Open all radiator valves (thermostatic radiator valves) of the heating installation.
► Open the cold water valve.
► Slowly open the filling cock.
► Fill it with water until the required filling pressure is reached.
► Close the cold water valve.
► Purge all radiators.
► Start the purging programme using the P10 and P11 test programmes (→ Page 27).
► Then check the filling pressure on the display.
► Top up with more water if necessary.
► Close the filling cock.

6.9 Activating the heat pump

1. Ensure the maximum flow temperature setting matches the heating installation.
2. To fully activate the heating installation, observe the installation instructions for the system controller.
3. Switch on the line protection switch in the fuse box which is connected to the heat pump.

6.10 Checking the product's operation

1. Ensure that the external control equipment (thermostats, external sensors, etc.) are sending a heating demand to the heat pump. When configuring several areas, test heating circuit by heating circuit and ensure that the appropriate heating circuit gets warmer.
2. Ensure that all heating circuit thermostatic radiator valves are open.
3. If necessary, balance the heat generator.

6.11 Operating noises

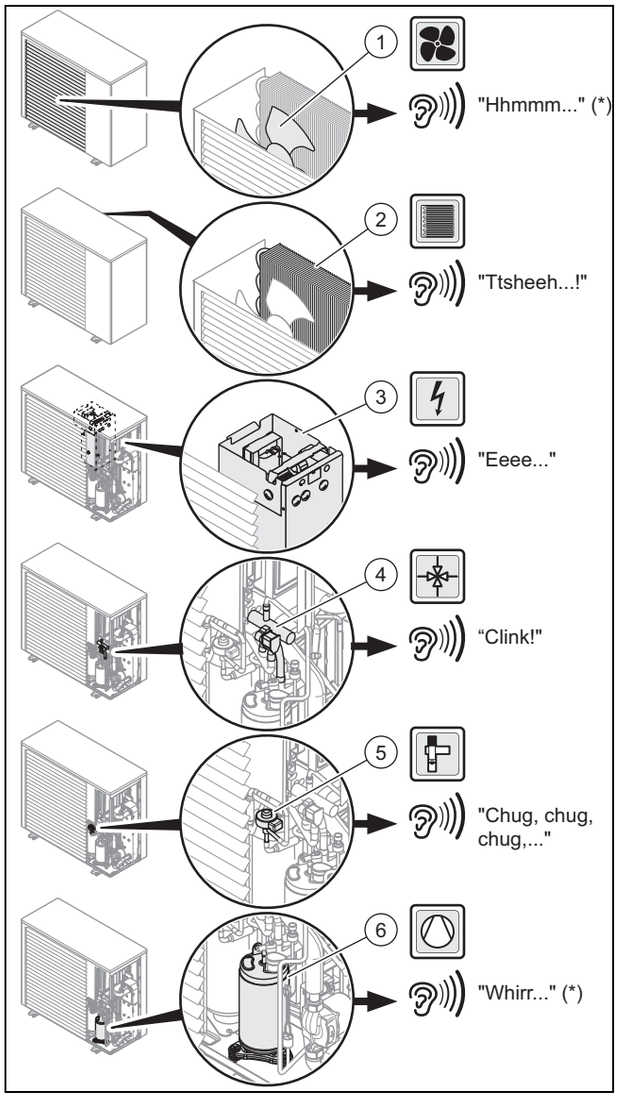

* Permanent operating noises

The noises listed do not constitute a fault with the heat pump.

In various operating modes, the noises come from the heat pump (Start, Thawing, Stop).

6.12 Adjusting the heating circuit

6.12.1 Purging the heating circuit

Conditions: SW10 open-end spanner

- ► Connect one end of the hose to the purging valve.
- ► In order to collect the residual glycol when purging the heating circuit, insert the other end of the hose into the mixing container.
- ► Close the stop valves on the back of the product.
- ► Increase the pressure in the heating circuit.
- ► Open the purging valve with an open-end spanner.
- ► Open the lower stop valve on the back of the product.
- ► If liquid escapes from the pipe, close the purging valve.
- ► Repeat the work steps for all hydraulic circuits by changing the direction of the 3-way valve.
- ► Check the pressure in the heating circuit. If necessary, increase it.
  - – Operating pressure: 0.15 … 0.2 MPa (1.50 … 2.0 bar)
- ► Open the service valves on the back of the product.
- ► Remove the hose and the mixing container.

Note

The system controller has a purging function. The purging function can be started via the heat pump's control module. Within 15 minutes, the pumps are switched on for a period of 30 seconds and switched off again (30 seconds).

6.12.1.1 Available pressure in the heat pump heating circuit

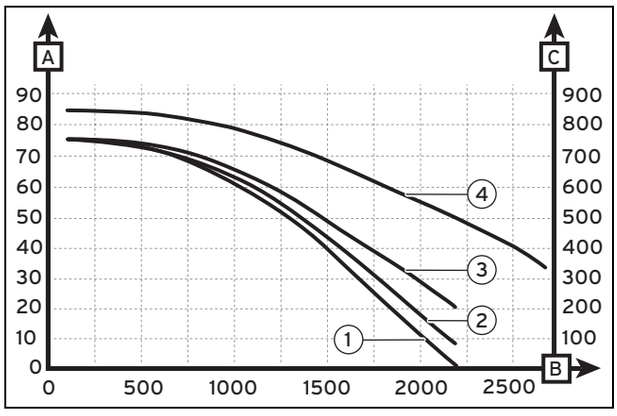

1	VWL 55/2 A 230 V (water temperature 20 °C)	4	VWL 155/2 A 230 V (water temperature 20 °C)
2	VWL 85/2 A 230 V (water temperature 20 °C)	A	Remaining feed head (kPa)
3	VWL 115/2 A 230 V (water temperature 20 °C)	B	Flow rate (l/h)
		C	Remaining feed head [mbar]

6.12.2 Adjusting the heating circuit flow rate

Caution.

Risk of material damage due to frost

If the minimum flow rate is too low, the heat exchanger may become damaged by frost.

- ► Operate the product with a sufficient flow rate (see table).

The product is designed for operation between the minimum flow rate and maximum flow rate, as specified in the table. If the product is operated with the minimum flow rate, this results in a loss of energy and efficiency. The heating comfort is still guaranteed but the energy savings are reduced.

	VWL 55/2	VWL 85/2	VWL 115/2	VWL 155/2
Minimum flow rate	380 l/h	380 l/h	540 l/h	1,200 l/h

	VWL 55/2	VWL 85/2	VWL 115/2	VWL 155/2
Maximum flow rate	860 l/h	1,400 l/h	1,900 l/h	2,590 l/h

You can read the flow rate directly from the controller. Depending on the type of liquid in the heating circuit, the flow rate displayed on the controller may be exaggerated.

Example: If you use a 30% mixture of propylene glycol and the liquid temperature is 5 °C, you must subtract 400 l/h from the value shown on the display.

► Use the following table to compare the various exaggeration flow rate values depending on liquid type.

– Applies for: VWL 55/2 A 230 V,
VWL 85/2 A 230 V,
VWL 115/2 A 230 V

Flow rate increase (l/h)		Temperature 5 °C	Temperature 15 °C	Temperature 25 °C
Liquid type	Water	0	0	0
	60% alcohol	0	0	0
	30% propylene glycol	400	240	120
	50% propylene glycol	650	500	400
	30% ethylene glycol	120	0	0
	50% ethylene glycol	400	140	50

– Applies for: VWL 155/2 A 230 V

Flow rate increase (l/h)		Temperature 5 °C	Temperature 15 °C	Temperature 25 °C
Liquid type	Water	0	0	0
	60% alcohol	0	0	0
	30% propylene glycol	600	440	280
	50% propylene glycol	1050	740	580
	30% ethylene glycol	520	350	300
	50% ethylene glycol	880	680	540

Note
Insufficient purging may lead to deviations in the flow rate.

► If you cannot reach the minimum flow rate, install an additional pump.
► If you cannot reach the recommended flow rate, adjust the heating circuit pressure on the controller and, if necessary, use a bypass valve (item 50).

6.12.3 Adapting the unit to the heating installation

The installation assistant is launched when the product is switched on for the first time.

If you have already filled the heating installation and terminated the installation assistant, but want to set the most important system parameters again, you can also call up the **Configuration** menu point.

Menu → Installer level Configuration

6.12.3.1 Heat pump setting parameters

To individually set the heat pump, you can adjust certain parameters in the **Configuration** menu.

Menu → Installer level Configuration

Additional setting data is listed in the appendix.

Heat pump setting parameters (→ Page 32)

6.13 Installing the side cladding

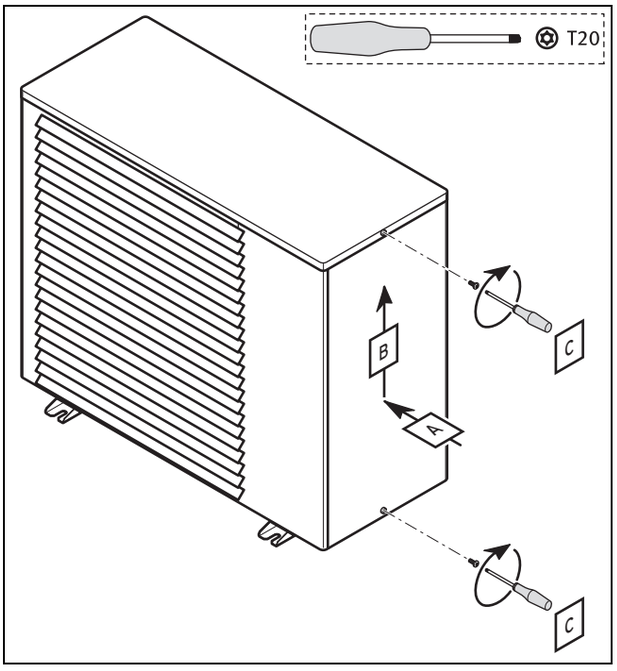

► Install the side cladding.

6.14 Instructing the operator

1. Explain the how the system operates to the operator.
2. Draw particular attention to the safety information, which the operator must follow.
3. Make the operator aware of the need for regular maintenance (maintenance contract).
4. Explain to the operator how to check the system's water volume/filling pressure.

7 Maintenance

7.1 Observing maintenance intervals

1. Only carry out maintenance work if you are a competent person.
2. Carry out annual maintenance.

7.2 Preparing for maintenance

7.2.1 Procuring spare parts

The original components of the unit were also certified as part of the CE declaration of conformity. Information about available Vaillant genuine spare parts is available by contacting the contact address provided on the reverse of this document.

- If you require spare parts for maintenance or repair work, use only Vaillant genuine spare parts.

7.3 Instructions before carrying out maintenance work

Observe the basic safety rules before carrying out maintenance work or installing spare parts.

Danger!

Risk of injury due to unauthorised access to the coolant circuit.

Escaping coolant may cause freezing if the exit point is touched.

- Only carry out work on the coolant circuit if you have been trained to do so and if you have the required protective clothing.
- Avoid skin and eye contact with the coolant.

- Switch the system off.
- Disconnect the system from the power supply.
- Where necessary, disconnect the heating circuit from the product by using the stop valves.
- If you have to replace parts on the heating circuit, you must first drain the product.
- When working on the product, protect all electric components from spray water.

7.4 Yearly maintenance

- Check that the safety devices are functioning properly.
- Check the heating circuit's fill pressure.
- Ensure that there are no traces of rust or oil on the coolant circuit components.
- Ensure that the product components are neither worn nor defective.
- Check that all wires sit securely in the connectors.
- Check the product's earthing.
- Check the heating pump's flow temperature and the settings.
- Remove any dust from the electronics box and the inverter box.
- Clean the ribbed pipe heat exchanger and ensure that air circulates between the fins and around the product.
- Check that the fan rotates freely.
- Check that condensate can escape freely from the heat pump by removing the adaptor underneath the heat pump.
- Clean the product as described in the operating instructions.
- Check that the vibration dampers are correctly seated on the coolant lines.

7.5 Cleaning the product

7.5.1 Cleaning the front

Warning.

Risk of injury due to sharp-edged casing.

The product's casing sections have sharp edges.

- Wear gloves when installing or dismantling the product's casing sections.

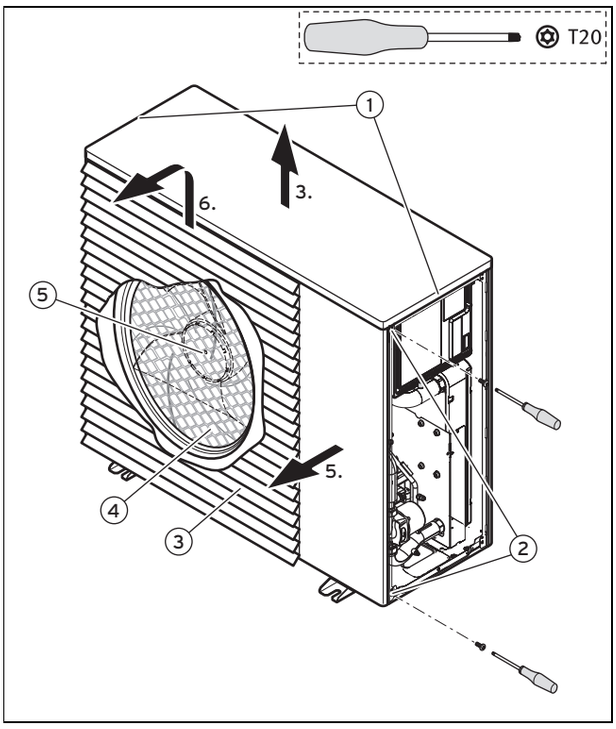

1. Remove the side casing. (→ Page 13)
2. Remove both screws **(1)**.
3. Lift off the cover.
4. Remove both screws **(2)** on the right front casing.
5. Remove the right front casing.
6. Lift the louvred grill **(3)** upwards.
7. Remover the fan grill casing **(4)**.
8. Remove the nut **(5)** from the fan.
9. Remove the fan.
10. Clean the product and the ribbed pipe heat exchanger.

7.5.2 Cleaning the back

Warning.

Risk of injury due to sharp-edged casing.

The product's casing sections have sharp edges.

► Wear gloves when installing or dismantling the product's casing sections.

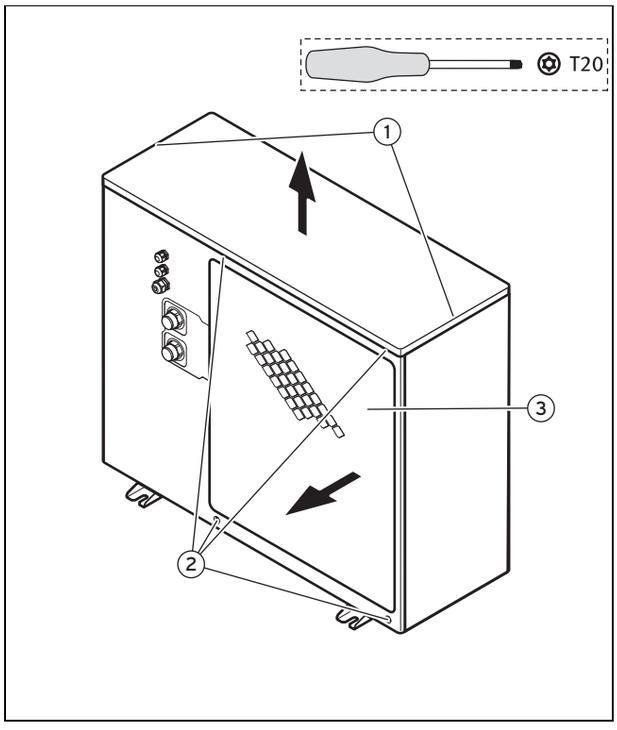

1. Remove the side casing. (→ Page 13)
2. Remove both screws **(1)**.
3. Lift off the cover.
4. Remove the four screws **(2)** and remove the mesh **(3)**.
5. Clean the product.

7.6 Draining the product

Conditions: SW10 open-end spanner

► Disconnect the product from the power supply.

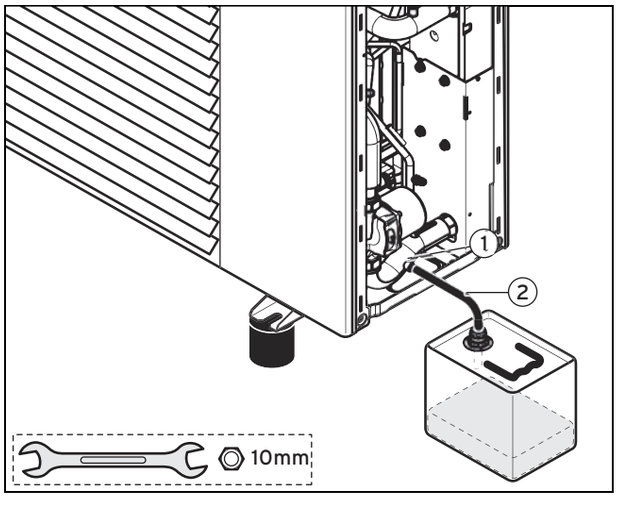

1	Heating circuit drain cock	2	Drain hose

1. Close the stop valves on the back of the heat pump.
2. To drain the heating circuit, connect a hose to the drain cock or place a vessel underneath the drain cock.
3. Open the drain cock with an open-end spanner.

Note
If necessary, you can drain the heating installation using this drain cock by opening the stop valves on the back of the heat pump.

7.7 Checking the product's status codes

Menu → Live Monitor

You can check the product's status codes at any time to see which operating condition the heat pump is in. You can read these codes on the display of the heat pump control module or hydraulic station.

Status codes (→ Page 33)

7.8 Checking the electrical installation

► Check the electrical installation and take all relevant directives into account.

Checking the cable

If the product's mains power cable is damaged, then, in order to avoid danger, only the manufacturer, the Customer Service team or a similarly qualified person should replace the mains power cable.

► To replace the mains power cable, see Carrying out the electrical installation (→ Page 16).

7.9 Start-up following maintenance

1. After the maintenance work has been completed, start up the product – see Start-up (→ Page 20).
2. If you have carried out work on load-bearing parts, check that they are securely fitted.
3. When you have completed work on the product, carry out an operational and safety test.

8 Troubleshooting

8.1 Troubleshooting

You should carry out the following tests before introducing additional steps:

► Make absolutely sure that the power supply was not cut and that the product is correctly connected.
► Ensure that the service valves are open.
► Check that all external controllers are correctly connected.

8.2 Fault codes

The fault codes are described in a table in the Appendix.

Fault codes (→ Page 37)

In the event of a fault, a fault code number is shown in the controller's display.

► Carry out all necessary repairs.
► Switch the product on/off using the partition.

8.3 Carrying out the actuator test

Menu → Installer level → Test menu → Sensor/actuator test

You can check that the components of the heating installation are functioning correctly using the sensor/actuator test.

Display	Test programme
T.0.01	Building circuit pump power
T.0.05	Fan power
T.0.07	4-way valve (circuits for thawing are not counted)
T.0.08	Position of the electronic expansion valve
T.0.09	Heating coil compressor
T.0.13	Flow temperature
T.0.14	Return temperature
T.0.16	Building circuit flow rate
T.0.17	Lockout contact S20
T.0.26	Compressor outlet temperature
T.0.27	Compressor inlet temperature
T.0.28	Electrical expansion valve – ambient temperature
T.0.29	Electronic expansion valve – building circuit temperature
T.0.30	High pressure
T.0.31	Condensation temperature
T.0.33	Evaporation temperature
T.0.34	Superheating target value
T.0.35	Superheating actual value
T.0.36	Subcooling actual value
T.0.66	Air inlet temperature
T.0.67	High-pressure switch
T.0.68	Compressor rotational speed
T.0.69	Condensate pan heating
T.1.37	Outside temperature
T.1.38	DCF status
T.1.59	Multi-function output 1
T.1.60	Multi-function output 2
T.1.61	Diverter valve 1
T.1.62	Flow sensor
T.1.63	Cylinder sensor
T.1.64	Multi-function input
T.1.65	Energy supply company input

8.4 Carrying out check programmes

Menu → Installer level → Test programs → Check programs

You can use the check programmes to purge the circuits, carry out manual de-icing and check the product's primary function.

Display	Check programme
P01	Forced heating
P02	Forced cooling
P06	Manual de-icing
P10	Purging the heating circuit
P11	Purging the hot water circuit

9 Decommissioning

9.1 Temporary decommissioning

1. Switch off the product.
2. Disconnect the product from the power supply.

9.2 Permanently decommissioning

1. Switch off the product.
2. Disconnect the product from the power supply.
3. Drain the product. (→ Page 26)
4. Dispose of or recycle the product and its components.

10 Vaillant customer service

10.1 Customer service

To ensure regular servicing, it is strongly recommended that arrangements are made for a Maintenance Agreement. Please contact Vaillant Service Solutions for further details:

Telephone: 0330 100 3461

11 Disposal

11.1 Recycling and disposal

- The competent person who installed your product is responsible for the disposal of the packaging.

If the product is identified with this symbol:

- In this case, do not dispose of the product with the household waste.
- Instead, hand in the product to a collection centre for old electrical or electronic appliances.

If the product contains batteries that are marked with this symbol, these batteries may contain substances that are hazardous to human health and the environment.

- In this case, dispose of the batteries at a collection point for batteries.

11.2 Arranging disposal of coolant

Warning.
Risk of damage to the environment.

This heat pump contains R 410 A coolant. The coolant must not be allowed to escape into the atmosphere. R 410 A is a fluorinated greenhouse gas covered by the Kyoto Protocol, with a GWP of 1725 (GWP = Global Warming Potential).

- Before the product is disposed of, have the coolant which it contains completely drained into a suitable vessel so that it can then be recycled or disposed of in accordance with regulations.

The competent person who installed the heat pump must dispose of the coolant.

Personnel who are approved for energy recovery must have the relevant certification that corresponds to the valid regulations.

Appendix

A Heat pump schematic

A.1 Heat pump schematic drawing (VWL 55/2 A 230 V)

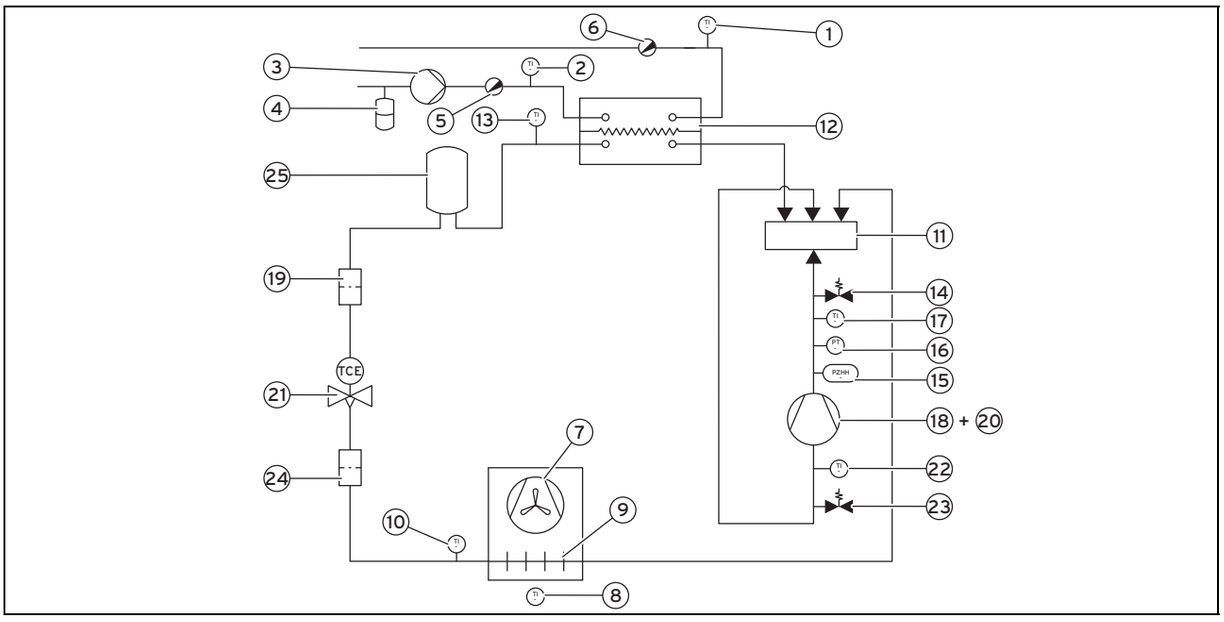

1	Flow heating circuit temperature sensor
2	Return heating circuit temperature sensor
3	High-efficiency pump with flow sensor
4	Expansion vessel (not for Vaillant)
5	Drain valve
6	Purging valve
7	Fan
8	Air inlet temperature sensor
9	Ribbed pipe heat exchanger
10	Temperature sensor of the ribbed pipe heat exchanger
11	4-way valve
12	Plate heat exchanger
13	Temperature sensor after the plate heat exchanger
14	Service valve for the high-pressure range of the coolant circuit
15	High-pressure pressure switch in the coolant circuit
16	High-pressure sensor in the coolant circuit
17	Compressor outlet temperature sensor
18	Rotary piston compressor
19	Filter
20	Liquid separator
21	Electronic expansion valve
22	Compressor inlet temperature sensor
23	Service valve for the low-pressure range of the coolant circuit
24	Filter
25	Fluid collector

A.2 Heat pump schematic drawing (VWL 85/2 A 230 V)

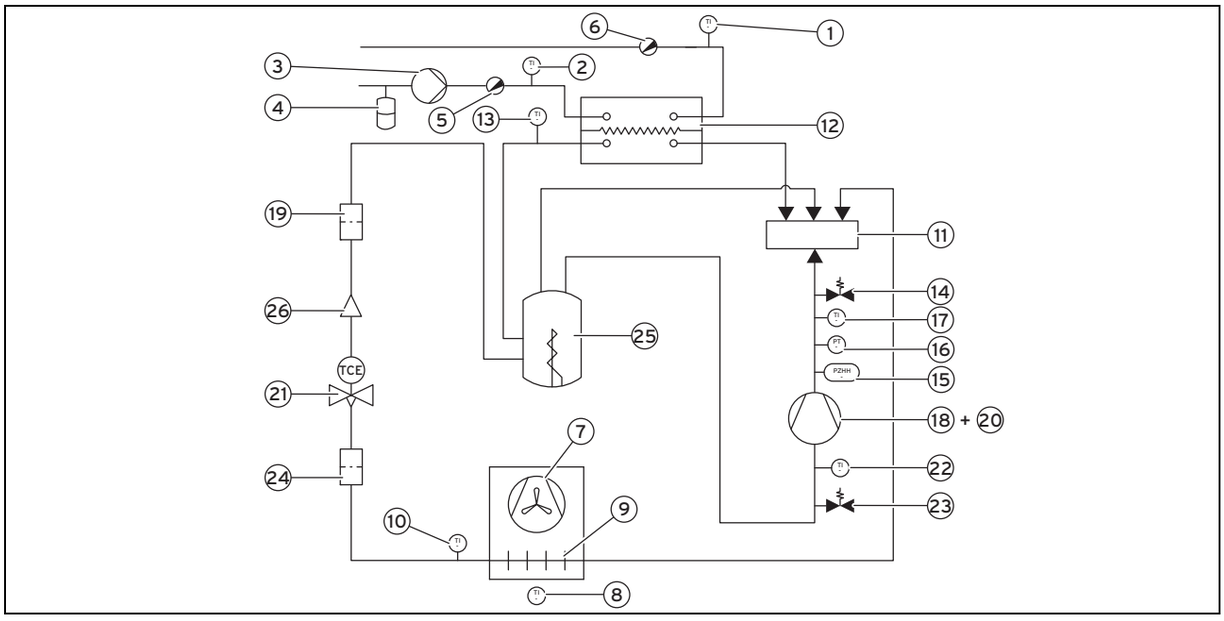

1	Flow heating circuit temperature sensor	14	Service valve for the high-pressure range of the coolant circuit
2	Return heating circuit temperature sensor	15	High-pressure pressure switch in the coolant circuit
3	High-efficiency pump with flow sensor	16	High-pressure sensor in the coolant circuit
4	Expansion vessel (not for Vaillant)	17	Compressor outlet temperature sensor
5	Drain valve	18	Rotary piston compressor
6	Purging valve	19	Filter
7	Fan	20	Liquid separator
8	Air inlet temperature sensor	21	Electronic expansion valve
9	Ribbed pipe heat exchanger	22	Compressor inlet temperature sensor
10	Temperature sensor of the ribbed pipe heat exchanger	23	Service valve for the low-pressure range of the coolant circuit
11	4-way valve	24	Filter
12	Plate heat exchanger	25	Gas buffer
13	Temperature sensor after the plate heat exchanger	26	Flow rate limiter (cooling mode)

A.3 Heat pump schematic drawing (VWL 115/2 A 230 V)

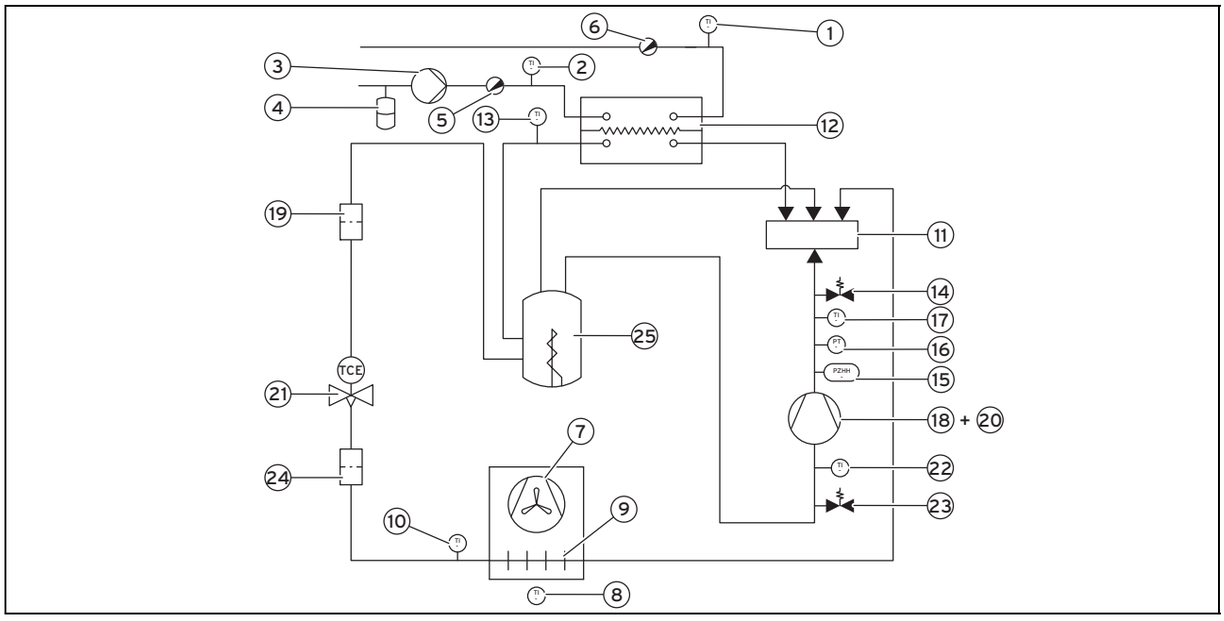

1	Flow heating circuit temperature sensor	14	Service valve for the high-pressure range of the coolant circuit
2	Return heating circuit temperature sensor	15	High-pressure pressure switch in the coolant circuit
3	High-efficiency pump with flow sensor	16	High-pressure sensor in the coolant circuit
4	Expansion vessel (not for Vaillant)	17	Compressor outlet temperature sensor
5	Drain valve	18	Rotary piston compressor
6	Purging valve	19	Filter
7	Fan	20	Liquid separator
8	Air inlet temperature sensor	21	Electronic expansion valve
9	Ribbed pipe heat exchanger	22	Compressor inlet temperature sensor
10	Temperature sensor of the ribbed pipe heat exchanger	23	Service valve for the low-pressure range of the coolant circuit
11	4-way valve	24	Filter
12	Plate heat exchanger	25	Gas buffer
13	Temperature sensor after the plate heat exchanger		

A.4 Heat pump schematic drawing (VWL 155/2 A 230 V)

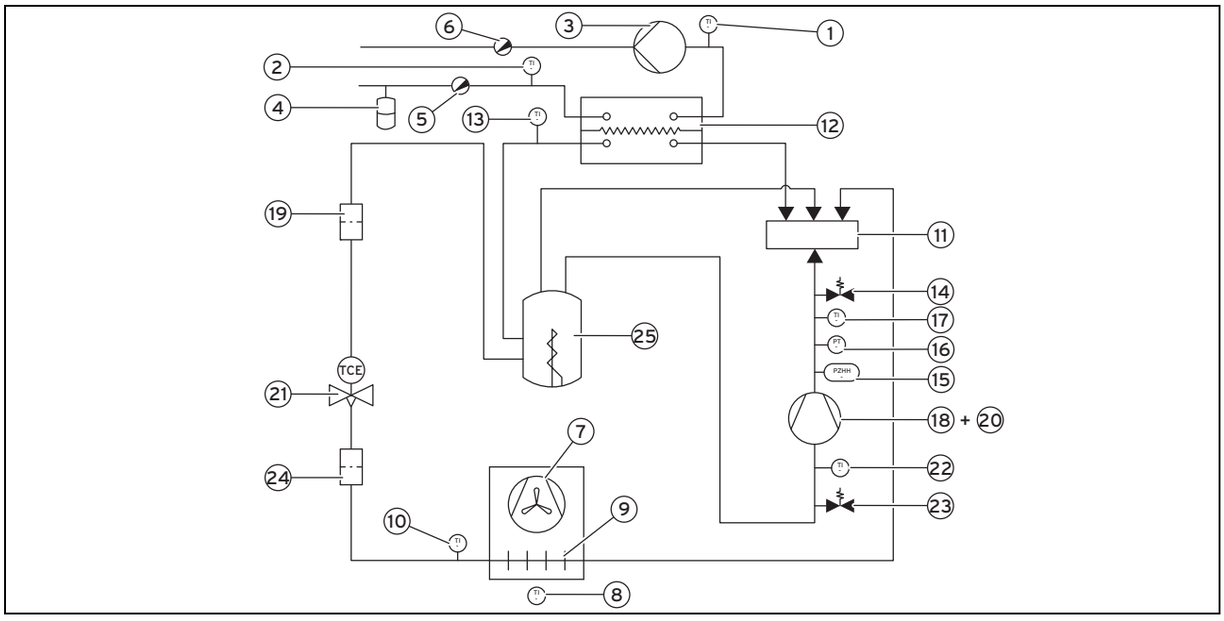

1	Flow heating circuit temperature sensor	14	Service valve for the high-pressure range of the coolant circuit
2	Return heating circuit temperature sensor	15	High-pressure pressure switch in the coolant circuit
3	High-efficiency pump with flow sensor	16	High-pressure sensor in the coolant circuit
4	Expansion vessel (not for Vaillant)	17	Compressor outlet temperature sensor
5	Drain valve	18	Rotary piston compressor
6	Purging valve	19	Filter
7	Fan	20	Liquid separator
8	Air inlet temperature sensor	21	Electronic expansion valve
9	Ribbed pipe heat exchanger	22	Compressor inlet temperature sensor
10	Temperature sensor of the ribbed pipe heat exchanger	23	Service valve for the low-pressure range of the coolant circuit
11	4-way valve	24	Filter
12	Plate heat exchanger	25	Gas buffer
13	Temperature sensor after the plate heat exchanger		

B Heat pump setting parameters

Note
If repairs are carried out on the heat pump electronics (e.g. replacing the PCB), you must reset the parameters.

Parameter	Explanation	Default setting	Adjustment range	Own setting
Language	Select the required language here.	02 English	01 Deutsch 02 English 03 Français 04 Italiano 05 Dansk 07 Castellano 08 Türkçe 09 Magyar 11 Українська 15 Svenska 16 Norsk 18 Čeština 19 Hrvatski 20 Slovenčina 22 Slovenščina	
Contact details	As a competent person, you can enter your telephone number here. The end customer can read this number in the menu → Information.			
Max. remaining heating circuit feed head	Limiting the remaining heating circuit feed head. If the value is reduced, the pump speed is reduced as far as necessary in order to prevent the remaining feed head from being exceeded.	Maximum value	≥ 100 mbar	
Max. remaining hot water feed head	Limiting the remaining hot water circuit feed head. If the value is reduced, the pump speed is reduced as far as necessary in order to prevent the remaining feed head from being exceeded.	Maximum value	≥ 100 mbar	
Max. duration of the power interruption	If the set value is exceeded when the power supply is disconnected, fault messages F.103, F.752 or F.753 may be displayed. **If the heat pump is to be operated in the normal or special tariff, set the value to 3 h in the special tariff during installation.**	0 h	0 - 99 h	

C Status codes

Status	Description
500	Product is waiting
501	Pump pre-run before heating mode
502	Pump pre-run correct in heating mode
503	Water temperature/compatibility test for heating mode setting
504	Start of heating mode activated
505	Maximum speed of pump pre-run in heating mode
506	Fan pre-run in heating mode
507	4-way valve in heating position
508	Electrical expansion valve in heating position
509	Compressor start requirement in heating mode
510	Product in heating mode
511	Product in hot water handling mode
512	Heating mode: Water temperature exceeded
513	Hot water handling mode: Water temperature exceeded
514	Pump overrun after heating mode
515	Pump pre-run before thawing
516	Product in thawing mode

Status	Description
517	Pump overrun after thawing
518	Pump operated by remote control (auxiliary)
519	Compressor's oil temperature too low for operation
530	Pump pre-run before cooling mode
531	Pump pre-run correct in cooling mode
532	Water temperature/compatibility test for cooling mode setting
533	Start of cooling mode activated
534	Maximum speed of pump pre-run
535	Fan pre-run
536	4-way valve in cooling position
537	Electrical expansion valve in cooling position
538	Compressor start requirement in cooling mode
539	Product in cooling mode
540	Cooling mode: Water temperature exceeded
541	Pump overrun after cooling mode
550	Fault: Pressure compensation
551	Fault: Pressure switch
552	Fault detected: Operating pressure
553	Fault detected: Initial operating pressure not OK
554	Low-tariff power supply failure
555	Coolant circuit pressure not in the permissible range/high pressure : low pressure ratio too low
556	Coolant circuit pressure not in the permissible range/condensation rate too low
557	Coolant circuit pressure not in the permissible range/evaporation rate too high
558	Coolant circuit pressure not in the permissible range/condensation rate too high
559	Refrigerant circuit pressure too low
560	Compressor outlet overheated
561	Fault: Compressor inlet temperature sensor
562	Fault: Compressor outlet temperature sensor
563	Fault: Plate heat exchanger temperature sensor
564	Fault: Fin-type heat exchanger temperature sensor
565	Fault: Outside temperature sensor
566	Fault: Flow temperature sensor
567	Fault: Return temperature sensor
568	Fault: High-pressure sensor in refrigerant circuit
569	Fault: Inverter low-voltage bus
570	Fault: Inverter switched off
571	Fault: Inverter overheated
572	Fault: Inverter overcurrent
573	Fault: Inverter voltage too low
574	Fault: Inverter voltage too high
575	Fault: Internal inverter
576	Fault: Inverter heat sensor
577	Fault: Inverter overload
578	Fault: Fan PCB

Status	Description
579	Communication fault: eBUS
580	Fault: Flow rate
581	Communication error with inverter
582	Fault: Compressor overcurrent
584	Fault: Electronic expansion valve
585	Fan speed too low
588	Coding resistance fault
589	Fault: Underfloor protective circuit
590	Fault: 4-way valve
599	Fault: Product

D Technical data

Note
The following performance data is only applicable to new products with clean heat exchangers.

Technical data – **General**

	VWL 55/2 A 230 V	VWL 85/2 A 230 V	VWL 115/2 A 230 V	VWL 155/2 A 230 V
Heat pump type	Monoblock air/water heat pump	Monoblock air/water heat pump	Monoblock air/water heat pump	Monoblock air/water heat pump
Flow/return heating connections, boiler side	1 1/4"	1 1/4"	1 1/4"	1 1/4"
Product dimensions, width	970 mm	1,103 mm	1,103 mm	1,103 mm
Product dimensions, height	834 mm	975 mm	975 mm	1,375 mm
Product dimensions, depth	408 mm	463 mm	463 mm	463 mm
Net weight	90 kg	106 kg	126 kg	165 kg
Hydraulic lines material	Copper	Copper	Copper	Copper
Hydraulic connections material	Brass	Brass	Brass	Brass
Hydraulic seals material	EPDM	EPDM	EPDM	EPDM
Plate heat exchanger material	AISI 304 stainless steel	AISI 304 stainless steel	AISI 304 stainless steel	AISI 304 stainless steel
Pump casing material	Painted cast iron	Painted cast iron	Painted cast iron	Painted cast iron
Pollution rating	2	2	2	2
Electric connection	230 V (+10%/-15%) ~50 Hz	230 V (+10%/-15%) ~50 Hz	230 V (+10%/-15%) ~50 Hz	230 V (+10%/-15%) ~50 Hz
Level of protection	IP 25	IP 25	IP 25	IP 25
Maximum start-up current	16 A	16 A	20 A	25 A
Maximum current consumption	16 A	16 A	20 A	25 A
Pump power consumption	15 … 70 W	15 … 70 W	15 … 70 W	6 … 87 W
Fan power consumption	15 … 42 W	15 … 42 W	15 … 76 W	15 … 76 W **Note** 2 x
Electrical classification	I	I	I	I
Overvoltage category	II	II	II	II

	VWL 55/2 A 230 V	VWL 85/2 A 230 V	VWL 115/2 A 230 V	VWL 155/2 A 230 V
Fan rotational speed	550 rpm	550 rpm	700 rpm	600 rpm
Sound power level for A7W35 according to EN 12102 and EN ISO 9614-1	58 dB(A)	60 dB(A)	65 dB(A)	65 dB(A)
Sound power level for A7W45 according to EN 12102 and EN ISO 9614-1	59 dB(A)	60 dB(A)	65 dB(A)	65 dB(A)
Sound power level for A7W55 according to EN 12102 and EN ISO 9614-1	61 dB(A)	61 dB(A)	66 dB(A)	66 dB(A)
Maximum cylinder temperature	60 °C	63 °C	63 °C	63 °C
Minimum air temperature (heating and cylinder charging)	−15 °C	−20 °C	−20 °C	−20 °C
Maximum air temperature (heating)	28 °C	28 °C	28 °C	28 °C
Max. air temperature (cylinder charging)	46 °C	46 °C	46 °C	46 °C
Max. air flow	2,000 m³/h	2,700 m³/h	3,400 m³/h	5,500 m³/h

Technical data – **Heating circuit**

	VWL 55/2 A 230 V	VWL 85/2 A 230 V	VWL 115/2 A 230 V	VWL 155/2 A 230 V
Minimum operating pressure	0.1 MPa (1.0 bar)	0.1 MPa (1.0 bar)	0.1 MPa (1.0 bar)	0.1 MPa (1.0 bar)
Maximum operating pressure	0.3 MPa (3.0 bar)	0.3 MPa (3.0 bar)	0.3 MPa (3.0 bar)	0.3 MPa (3.0 bar)
Heating circuit water contents in the heat pump	1.1 l	1.6 l	2.1 l	2.7 l
Minimum heating circuit water contents	17 l	21 l	35 l	60 l
Min. volume flow rate	380 l/h	380 l/h	540 l/h	1,200 l/h
Nominal volume flow rate, max. volume flow rate	860 l/h	1,400 l/h	1,900 l/h	2,590 l/h
Hydraulic pressure difference	640 mbar	450 mbar	300 mbar	370 mbar

Technical data – Coolant circuit

	VWL 55/2 A 230 V	VWL 85/2 A 230 V	VWL 115/2 A 230 V	VWL 155/2 A 230 V
Coolant type	R410A	R410A	R410A	R410A
Coolant contents	1.80 kg	1.95 kg	3.53 kg	4.40 kg
Maximum permissible operating overpressure	4.15 MPa (41.50 bar)	4.15 MPa (41.50 bar)	4.15 MPa (41.50 bar)	4.15 MPa (41.50 bar)
Compressor type	Rotary piston	Rotary piston	Rotary piston	Rotary piston
Oil type	Specific polyvinyl ether (PVE)	Specific polyvinyl ether (PVE)	Specific polyvinyl ether (PVE)	Specific polyvinyl ether (PVE)
Coolant circuit control system	Electronic	Electronic	Electronic	Electronic

Technical data – **Heat pump system performance data**

	VWL 55/2 A 230 V	VWL 85/2 A 230 V	VWL 115/2 A 230 V	VWL 155/2 A 230 V
Heating output A-7/W35	4.90 kW	6.70 kW	7.90 kW	11.80 kW
A-7/W35 output figure/EN 14511 coefficient of performance	2.40	2.80	2.50	2.60
A7/W35 heating output	4.70 kW	8.10 kW	10.50 kW	14.60 kW
A7/W35 output figure/EN 14511 coefficient of performance	4.70	4.80	4.20	4.50
Power consumption effective at A7/W35	1.10 kW	1.80 kW	2.50 kW	3.40 kW
Input current at A7/W35	4.80 A	7.80 A	10.90 A	14.80 A
A7/W45 heating output	4.40 kW	7.80 kW	10.20 kW	13.40 kW
A7/W45 output figure/EN 14511 coefficient of performance	3.40	3.80	3.40	3.40
Power consumption effective at A7/W45	1.30 kW	2.10 kW	3.00 kW	4.10 kW
Input current at A7/W45	5.70 A	9.10 A	13.00 A	17.80 A
A7/W55 heating output	4.20 kW	7.00 kW	9.80 kW	11.20 kW
A7/W55 output figure/EN 14511 coefficient of performance	2.70	3.00	2.90	2.30
Power consumption effective at A7/W55	1.60 kW	2.40 kW	3.50 kW	5.00 kW
Input current at A7/W55	7.00 A	10.40 A	15.20 A	21.70 A

E Overview of fault codes

Code	Meaning	Cause
F.022	Water pressure too low	Insufficient water in the heating system
F.037	Fan fault	– Obstruction in the product's air guiding – Fan motor not connected or faulty – The connection between the main PCB and the fan PCB is damaged or broken.
F.042	Fault: Coding resistance	– The product's coding resistance is missing or is faulty – Coding resistance value outside the permissible range – X25 plug not connected or was connected incorrectly
F.073	Fault: Water pressure sensor	Line to water pressure sensor is broken or has a short circuit
F.086	Contact thermostat has opened.	– Underfloor heating temperature too high – Heating circuit flow rate too low – Underfloor heating circuit is closed
F.103	Fault: Spare part detection	– The "Max. duration power supply cut-off" parameter has been set poorly (see the "Heat pump setting parameters" section in the appendix). – The main PCB that is fitted as a spare part or the inverter does not match the product
F.514	Temp. sensor fault: Compressor inlet	– Sensor is faulty or incorrectly connected to the main PCB
F.517	Temp. sensor fault: Compressor outlet	
F.519	Sensor fault: Return temperature	
F.520	Sensor fault: Flow temperature	
F.523	Sensor fault: VF1	Line to VF1 temperature sensor is broken or has a short circuit.
F.526	Sensor fault: Temp. environment circuit EEV [1)]	Sensor is faulty or incorrectly connected to the main PCB

1) Sensor on the evaporator
2) Sensor on the condenser

Code	Meaning	Cause
F.532	Building circuit: Flow rate too low	– Heating circuit not fully purged – Dirt filter in the heating circuit return is missing or blocked – Low water pressure – Pressure loss in the heating circuit too high – Pump cabling faulty – Pump faulty Check the specific flow rate in the heating circuit during the sensor/actuator test – Between 7000 and 7700 l/h: The power supply is not sufficient – Between 7700 and 8200 l/h: The pump runs dry (no water in the heating circuit; the heating circuit loses water) – Between 8200 and 8700 l/h: Fault in the electronics – Between 8700 and 9200 l/h: The pump is blocked – Between 9200 and 10,000 l/h: No PWM signal (cable faulty or not connected; fault in the main PCB)
F.536	Compressor outlet temp. too high	– Coolant quantity too low – Sensor is faulty or incorrectly connected to the main PCB – Premature expansion in the liquid area of the coolant circuit (loss of charge) – Electronic expansion valve faulty – Heat exchanger blocked
F.537	High pressure switch opened	– Coolant volume too high or too low – Vacuum insufficient (10 mbar) – Incondensable particle in the coolant circuit – Pressure switch or electrical connection faulty – Premature expansion in the liquid area of the coolant circuit (loss of charge) – Flow quantity too high (see defined maximum flow rate) – Flow rate monitor faulty – Insufficient heat transfer in the heat exchanger
F.539	Refrigerant pressure too low	– Coolant quantity too low – Air flow too low – No thawing – The resistance heating in the condensate receiver is faulty. – 4-way valve faulty – Electronic expansion valve motor faulty, or connection faulty
F.546	Sensor fault: High pressure	– Faulty cabling
F.554	Coolant pressure not in operating range	– Coolant volume too high or too low – Incondensable particle in the coolant circuit – Electronic expansion valve faulty – Premature expansion in the liquid area of the coolant circuit (loss of charge) – Flow quantity too high (see defined maximum flow rate) – Insufficient heat exchange in the plate heat exchanger or the ribbed pipe heat exchanger – 4-way valve faulty – Temperature sensor faulty
F.582	EEV fault	– Cable insulation faulty – Connection broken
F.585	Sensor fault: Temp. building circuit EEV [2)]	– Sensor is faulty or incorrectly connected to the main PCB
F.685	Communication fault: eBUS	– The product is not connected to the controller – Polarity inverted
F.750	Connection fault: Compressor	– Cable insulation faulty – Connection broken
F.751	Compressor: Overcurrent fault	– The product's voltage supply is too low – The ribbed pipe heat exchanger or heat exchanger is dirty

1) Sensor on the evaporator
2) Sensor on the condenser

Code	Meaning	Cause
F.752	Fault: Inverter	– The "Max. duration power supply cut-off" parameter has been set poorly (see the "Heat pump setting parameters" section in the appendix). – Inverter box damaged – The cooler inverter box is blocked. – Faulty voltage supply
F.753	Connection fault: Inverter not recognised	– The "Max. duration power supply cut-off" parameter has been set incorrectly (see the "Heat pump setting parameters" section in the appendix). – The connection between the main PCB and the inverter box is damaged or broken. – The inverter box is not switched on.
F.754	Fault: Fan unit	– The connection between the main PCB and the fan PCB is damaged or broken. – The fan PCB is faulty
F.755	Fault: 4-way valve position incorrect	Mechanical or electrical problem. Move the 4-way valve away from the controller. When moving it, check that the coil voltage is correct.
F.774	Sensor fault: Air inlet temperature	– The temperature sensor is faulty or incorrectly connected to the main PCB.
F.1288	Fault: SP1 cylinder temperature sensor	Sensor is faulty or has not been correctly connected to the VWZ AI heat pump control module.
	Connection fault: Accessory modules	Fault in the VWZ AI heat pump control module (the connection between the display and the main PCB is faulty).
	Connection fault: Heat pump	The eBUS connection between the heat pump and the VWZ AI heat pump control module is faulty.
1) Sensor on the evaporator 2) Sensor on the condenser		

For further technical information, please call 0844 6933 133.

F Commissioning Checklist

AIR TO WATER HEAT PUMP COMMISSIONING CHECKLIST

This Commissioning Checklist is to be completed in full by the competent person who commissioned the heat pump and associated equipment as a means of demonstrating compliance with the appropriate Building Regulations and then handed to the customer to keep for future reference.

Failure to install and commission this equipment to the manufacturer's instructions may invalidate the warranty but does not affect statutory rights.

Customer name:	Telephone number:
Address:	
Heat Pump Make and Model	
Heat Pump Serial Number	
Commissioned by (PRINT NAME):	Certified Operative Reg. No. [1]
Company name:	Telephone number:
Company address:	
	Commissioning date:
Building Regulations Notification Number (if applicable) [2]	

CONTROLS - SYSTEM AND HEAT PUMP (tick the appropriate boxes)				
Time and temperature control to heating	Room thermostat and programmer/timer		Programmable Roomstat	
	Load/weather compensation		Optimum start control	
Time and temperature control to hot water	Cylinder thermostat and programmer/timer		Combined with Heat pump main controls	
Heating zone valves (including underfloor loops)	Fitted		Not required	
Hot water zone valves	Fitted		Not required	
Thermostatic radiator valves	Fitted		Not required	
Heat Pump Safety Interlock [3]	Built In		Provided	
Outdoor Sensor	Fitted		Not required	
Automatic bypass to system	Fitted		Not required	
Buffer Vessel Fitted	Yes		No	
If YES	Volume:		Litres	

ALL SYSTEMS		
The heating system has been filled and pressure tested	Yes	
Expansion vessel for heating is sized, fitted & charged in accordance with manufacturer's instructions	Yes	
The heat pump is fitted on a solid/stable surface capable of taking its weight	Yes	
The system has been flushed and cleaned in accordance with BS7593 and heat pump manufacturer's instructions	Yes	
What system cleaner was used?		
What inhibitor was used?	Quantity	litres
Is the system adequately frost protected?	Yes	

OUTDOOR UNIT		
Are all external pipeworks insulated?	Yes	
Is the fan free from obstacles and operational?	Yes	
Has suitable consideration been made for waste water discharge?	Yes	

CENTRAL HEATING MODE				
Heating Flow Temperature		°C	Heating Return Temperature	°C

DOMESTIC HOT WATER MODE Measure and Record:									
Is the heat pump connected to a hot water cylinder?		Unvented		Vented		Thermal Store		Not Connected	
Hot water has been checked at all outlets		Yes	Have Thermostatic Blending Valves been fitted?		Yes		Not required		

ADDITIONAL SYSTEM INFORMATON									
Additional heat sources connected:		Gas Boiler		Oil Boiler		Electric Heater		Solar Thermal	Other:

ALL INSTALLATIONS		
The heating, hot water and ventilation systems complies with the appropriate Building Regulations	Yes	
All electrical work complies with the appropriate Regulations	Yes	
The heat pump and associated products have been installed and commissioned in accordance with the manufacturer's instructions	Yes	
The operation of the heat pump and system controls have been demonstrated to the customer	Yes	
The manufacturer's literature, including Benchmark Checklist and Service Record, has been explained and left with the customer	Yes	

Commissioning Engineer's Signature
Customer's Signature
(To confirm satisfactory demonstration and receipt of manufacturer's literature)

Notes: [1] Installers should be members of an appropriate Competent Persons Scheme. [2] All installations in England and Wales must be notified to Local Area Building Control (LABC) either directly or through a Competent Persons Scheme. A Building Regulations Compliance Certificate will then be issued to the customer. [3] May be required for systems covered by G3 Regulations

benchmark COLLECTIVE MARK
THE MARK OF QUALITY FOR THE INSTALLATION, COMMISSIONING AND SERVICING OF DOMESTIC HEATING AND HOT WATER SYSTEMS

© Heating and Hotwater Industry Council (HHIC)

www.centralheating.co.uk

SERVICE RECORD

It is recommended that your heating system is serviced regularly and that the appropriate Service Interval Record is completed.

Service Provider

Before completing the appropriate Service Interval Record below, please ensure you have carried out the service as described in the manufacturer's instructions. Always use the manufacturer's specified spare part when replacing controls.

SERVICE 01	Date:
Engineer name:	
Company name:	
Telephone No:	
Operative ID No:	
Comments:	
Signature	

SERVICE 02	Date:
Engineer name:	
Company name:	
Telephone No:	
Operative ID No:	
Comments:	
Signature	

SERVICE 03	Date:
Engineer name:	
Company name:	
Telephone No:	
Operative ID No:	
Comments:	
Signature	

SERVICE 04	Date:
Engineer name:	
Company name:	
Telephone No:	
Operative ID No:	
Comments:	
Signature	

SERVICE 05	Date:
Engineer name:	
Company name:	
Telephone No:	
Operative ID No:	
Comments:	
Signature	

SERVICE 06	Date:
Engineer name:	
Company name:	
Telephone No:	
Operative ID No:	
Comments:	
Signature	

SERVICE 07	Date:
Engineer name:	
Company name:	
Telephone No:	
Operative ID No:	
Comments:	
Signature	

SERVICE 08	Date:
Engineer name:	
Company name:	
Telephone No:	
Operative ID No:	
Comments:	
Signature	

SERVICE 09	Date:
Engineer name:	
Company name:	
Telephone No:	
Operative ID No:	
Comments:	
Signature	

SERVICE 10	Date:
Engineer name:	
Company name:	
Telephone No:	
Operative ID No:	
Comments:	
Signature	

Index

A
Actuator test 27
B
Back
    Cleaning 25
C
Cable duct 17
CE label 4
Check programmes 27
Connection diagram 18
D
Documents 6
E
Electrical diagram 18
Electricity 3
F
Filling 22
Front
    Cleaning 25
Function menu 27
H
Hot water temperature 3
I
Identification plate 8
Installer level 20
L
Live Monitor
    Calling up 20
M
Manual
    Applicability 6
P
Product
    Unpacking 9
R
Regulations 4
Risk of scalding 3
S
Safety devices 6
    Expansion relief valve 3
    Expansion vessel 3
Sensor/actuator test 27
Setting the language 20
Side casing
    Removing 13
Spare parts 25
Statistics
    Calling up 20
T
Terminal connection diagram 18
Tool 4
Treating the heating water 21
V
Voltage 3

0020147164_06 ▮ 20.11.2015

Vaillant Ltd.
Nottingham Road ▮ Belper ▮ Derbyshire ▮ DE56 1JT
Telephone 0330 100 3461
info@vaillant.co.uk ▮ www.vaillant.co.uk

© These instructions, or parts thereof, are protected by copyright and may be reproduced or distributed only with the manufacturer's written consent.